YAMAHA

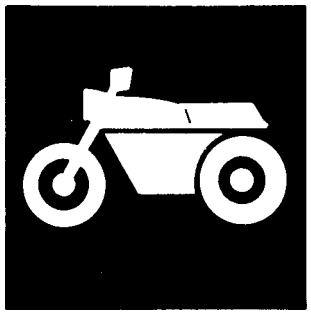

PARTS CATALOGUE

TDM900 (5PS1) EUROPE
TDM900P (5PS2) OCEANIA

1A5PS-300E2

YAMAHA GENUINE Parts & Accessories

TDM900/TDM900P
PARTS CATALOGUE
©2002 by Yamaha Motor Co., Ltd.
1st Edition, Apr. 2002
All rights reserved.
Any reprinting or unauthorized use
without the written permission of
Yamaha Motor Co., Ltd.
is expressly prohibited.
Printed in Japan

A3

A4

FOREWORD

This Parts Catalogue is related to the parts for the model(s) in the below frame. When you are ordering replacement parts, please refer to this Parts Catalogue and quote both part numbers and part names correctly.

TDM900(5PS1),TDM900P(5PS2)

1. Modifications or additions which have been made after issue of the Parts Catalogue will be announced in the Yamaha Parts News.
   It is advisable that you make necessary corrections to the Parts Catalogue according to the Yamaha Parts News.
2. Abbreviations
   The Following abbreviations are used in this Parts Catalogue.
   "UR" Use specified parts number.
   "UN" Use as many as needed.
   "AP" Alternate Parts
   "LM" Local Made (Parts need to be ordered locally)
   "F#" Frame No. (Applicable machine No.)
3. Parts, which are to be supplied in an assembly, are listed with a dot(.) in front of the part name as shown below.

   EXAMPLE
   CARBURETOR ASSY
   .JET, PILOT
   .NOZZLE, MAIN
4. Number of component for assembly
   The numeral appearing to the right of each component part indicates the quantity of parts for each assembly unit.

   EXAMPLE

PART NO.	DESCRIPTION	Q'TY	REMARKS
2F5-83310-60	FRONT FLASHER LIGHT ASSY	2	
115-83311-60	.BULB (6V-18W)	1	
1M1-83309-60	.REFLECTOR	1	

5. Applicable colors of graphics are represented in the "REMARKS" as shown below.

PART NO.	DESCRIPTION	Q'TY	REMARKS
2N4-24110-00-X5	FUEL TANK COMP.	1	MXR
3J1-24240-10	.GRAPHIC, FUEL TANK	1	FOR MXR

6. Applicable Serial No.

   Engine Serial No.

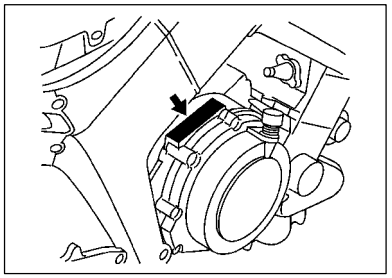

   Frame Serial No.

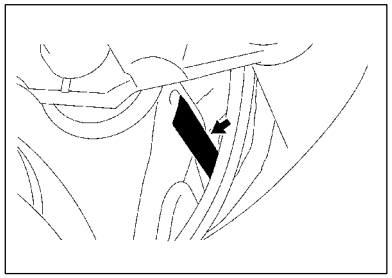

7. Note that the illustrations for reference in finding parts numbers, not to be used for assembling. When assembling, please use the applicable service manual.
8. The asterisk (*) before a reference number indicates modification items after the first edition.

MODEL LABEL

(1) A label called “Model Label” is affixed in the location as indicated in (3) below. When using this parts catalogue, please be sure to cross–refer the “model code – production code No.” in the catalogue to the “model code – production code No. “indicated on the Model Label affixed onto the product concemed.

(2) “Model Label”Indication

	a b
○	xxxx – xxx
●	x c

a: Model Type Code
b: Production Code No.
c: Colouring Type

○	4TW1–010
●	A

(3) Model Label Affixing Location

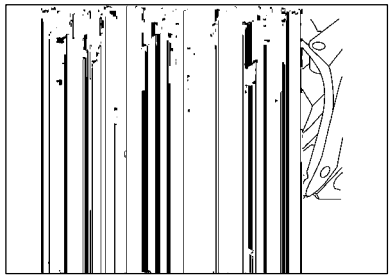

(4) Model Code – Production Code Number of Model Listed in This Parts Catalog

Model Code	Production Code No.	Country (destination)	Model Code	Production Code No.	Country (destination)
5PS1	020	BELGIUM			
	021				
	050	ENGLAND			
	051				
	060	GREECE			
	070	ITALY			
	080	HOLLAND			
	081				
	090	NORWAY			
	100	SOUTH AFRICA			
5PS2	010	AUSTRALIA			

(5) Colouring Information

Model Code	Colouring type code	Colour code	Colour Name	Abbrevi-ation
5PS1 5PS2	A	0781	VERY DARK BLUE METALLIC A	VDBMA
	B	0791	SILVER 3	S3
	C	0251	REDDISH YELLOW COCKTAIL 1	RYC1

CONTENTS

ENGINE

CYLINDER HEAD B2
CYLINDER B4
CRANKSHAFT. PISTON B5
VALVE B6
CAMSHAFT. CHAIN B8
WATER PUMP B9
RADIATOR. HOSE B10
OIL PUMP B12
INTAKE B15
INTAKE 2 ..... C3
EXHAUST C5
CRANKCASE C6
CRANKCASE COVER 1 ..... C8
STARTER CLUTCH C10
CLUTCH C11
TRANSMISSION C13
SHIFT CAM. FORK C15
SHIFT SHAFT D2

CHASSIS

FRAME D3
FENDER D4
SIDE COVER D7
REAR ARM D8
REAR SUSPENSION D10
STEERING D11
FRONT FORK D12
FUEL TANK D14
SEAT E2
FRONT WHEEL E3
FRONT BRAKE CALIPER E4
REAR WHEEL E5
REAR BRAKE CALIPER E7
STEERING HANDLE. CABLE E8
FRONT MASTER CYLINDER E9
STAND. FOOTREST E10
REAR MASTER CYLINDER E12
COWLING 1 ..... E14
GENERATOR F3
STARTING MOTOR F4
FLASHER LIGHT F5
METER F6
HEADLIGHT F7
TAILLIGHT F8
HANDLE SWITCH. LEVER F9
ELECTRICAL 1 ..... F10
ELECTRICAL 2 ..... F12

INDEX

NUMERICAL INDEX M1

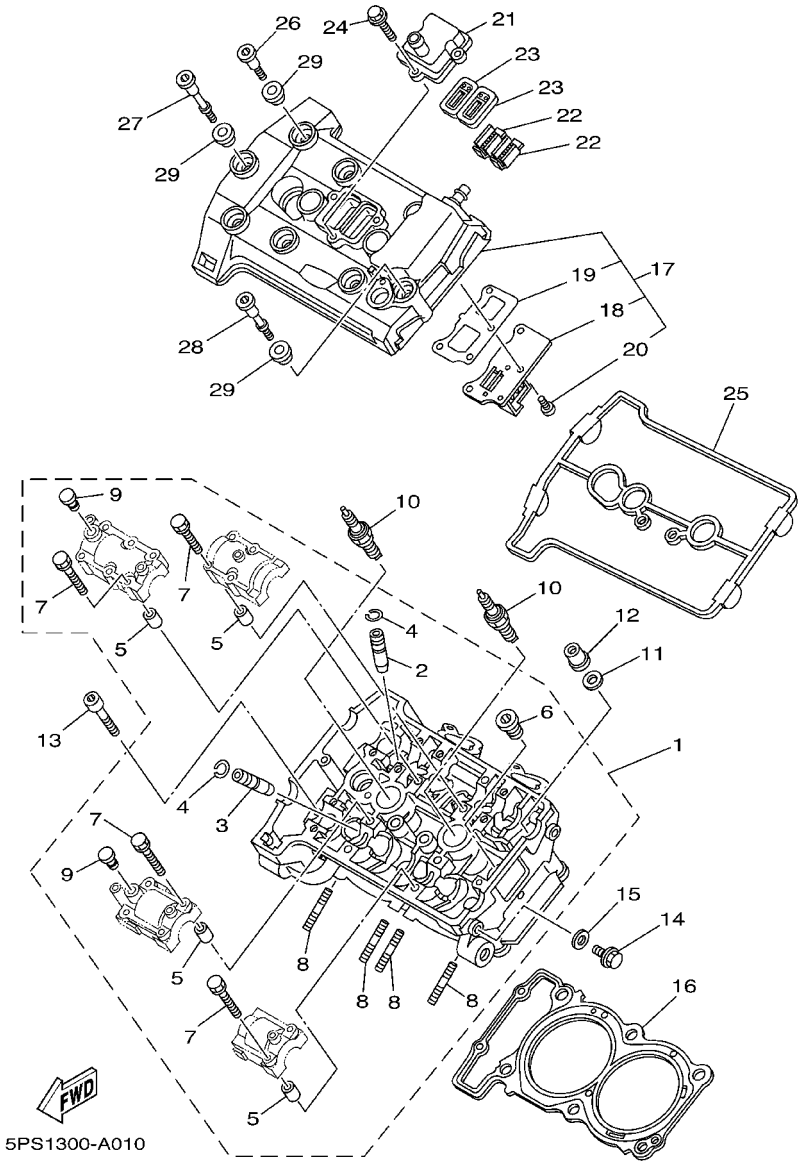

FIG. 1 CYLINDER HEAD

REF. NO.	PART NO.	DESCRIPTION	5PS1	5PS2				REMARKS
1	5PS-11101-00	CYLINDER HEAD ASSY	1	1				
2	3LD-11133-10	.GUIDE, INTAKE VALVE	6	6				
3	3LD-11134-10	.GUIDE, EXHAUST VALVE	4	4				
4	93440-10109	.CIRCLIP	10	10				
5	91808-16023	.PIN, DOWEL	8	8				
6	90340-18101	.PLUG, STRAIGHT SCREW	2	2				
7	90105-06153	.BOLT, FLANGE	16	16				
8	95617-08625	.BOLT, STUD	4	4				
9	90338-10150	.PLUG	2	2				
10	94701-00241	PLUG, SPARK (NGK DPR8EA-9)	2	2				UR
	94701-00242	PLUG, SPARK (ND X24EPR-U9)	2	2				UR
11	90201-103M4	WASHER, PLATE	6	6				
12	90179-10414	NUT	6	6				
13	91317-06150	BOLT	2	2				
14	95024-08012	BOLT, FLANGE	1	1				
15	90430-08119	GASKET	1	1				
16	5PS-11181-00	GASKET, CYLINDER HEAD 1	1	1				
17	5PS-11190-00	COVER, CYLINDER HEAD 1	1	1				
18	5PS-11165-00	.PLATE, BREATHER	1	1				
19	5PS-11169-00	.GASKET, BREATHER COVER	1	1				
20	90149-05009	.SCREW	3	3				
21	5PS-14899-00	CAP, CASE	1	1				
22	5PS-1482K-00	PLATE	2	2				
23	5PS-14890-00	REED VALVE ASS	2	2				
24	95027-06020	BOLT, FLANGE	3	3				
25	5PS-11193-00	GASKET, HEAD COVER 1	1	1				
26	90109-066F0	BOLT	6	6				

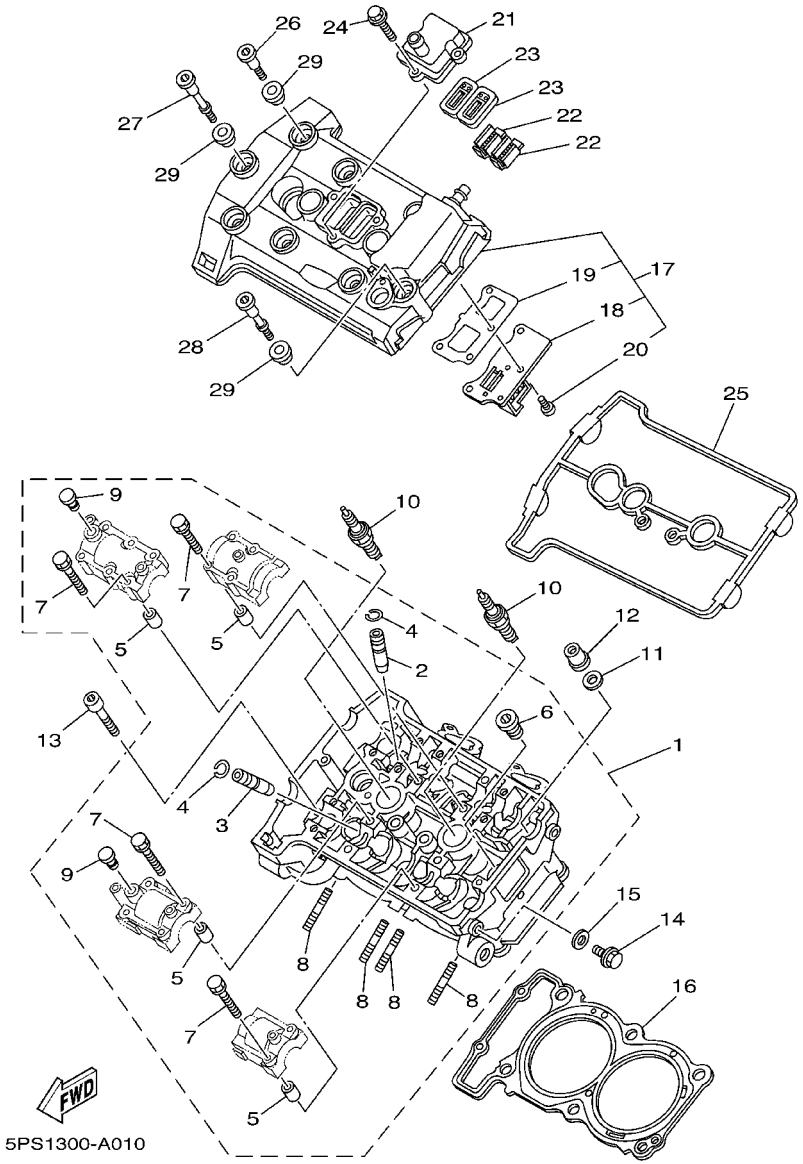

FIG. 1 CYLINDER HEAD

REF. NO.	PART NO.	DESCRIPTION	5PS1	5PS2				REMARKS
27	90109-06044	BOLT	1	1				
28	90109-06045	BOLT	1	1				
29	4KG-1111G-00	RUBBER, MOUNT 1	8	8				

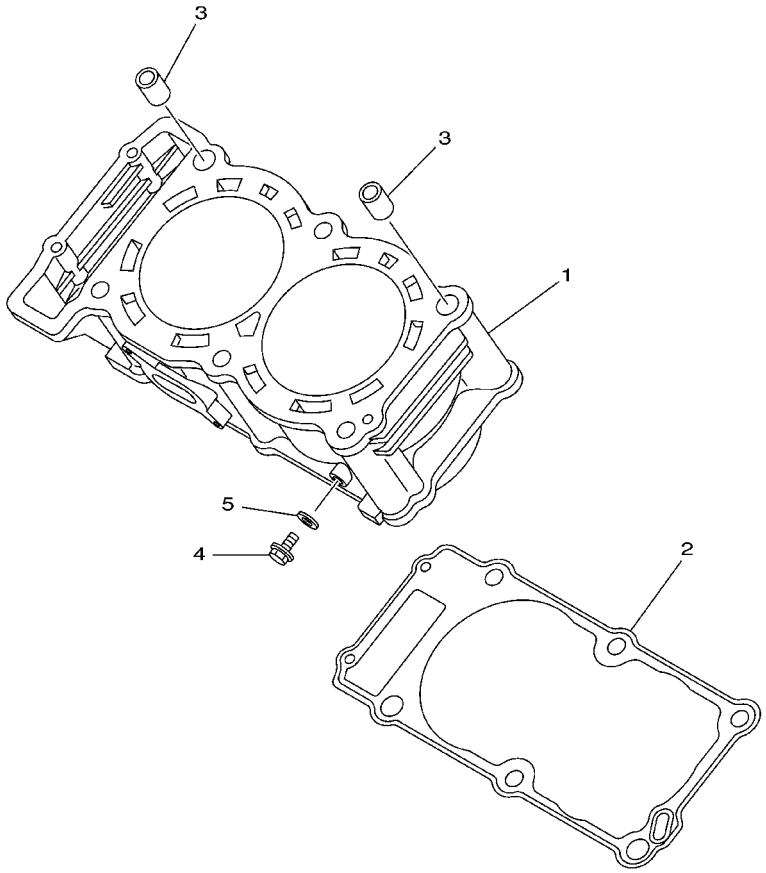

5PS1300-A020

FIG. 2 CYLINDER

REF. NO.	PART NO.	DESCRIPTION	5PS1	5PS2				REMARKS
1	5PS–11311–00	CYLINDER 1	1	1				
2	5PS–11351–00	GASKET, CYLINDER	1	1				
3	99530–14016	PIN, DOWEL	2	2				
4	90153–06029	SCREW, HEXAGON	1	1				
5	90430–06014	GASKET	1	1				

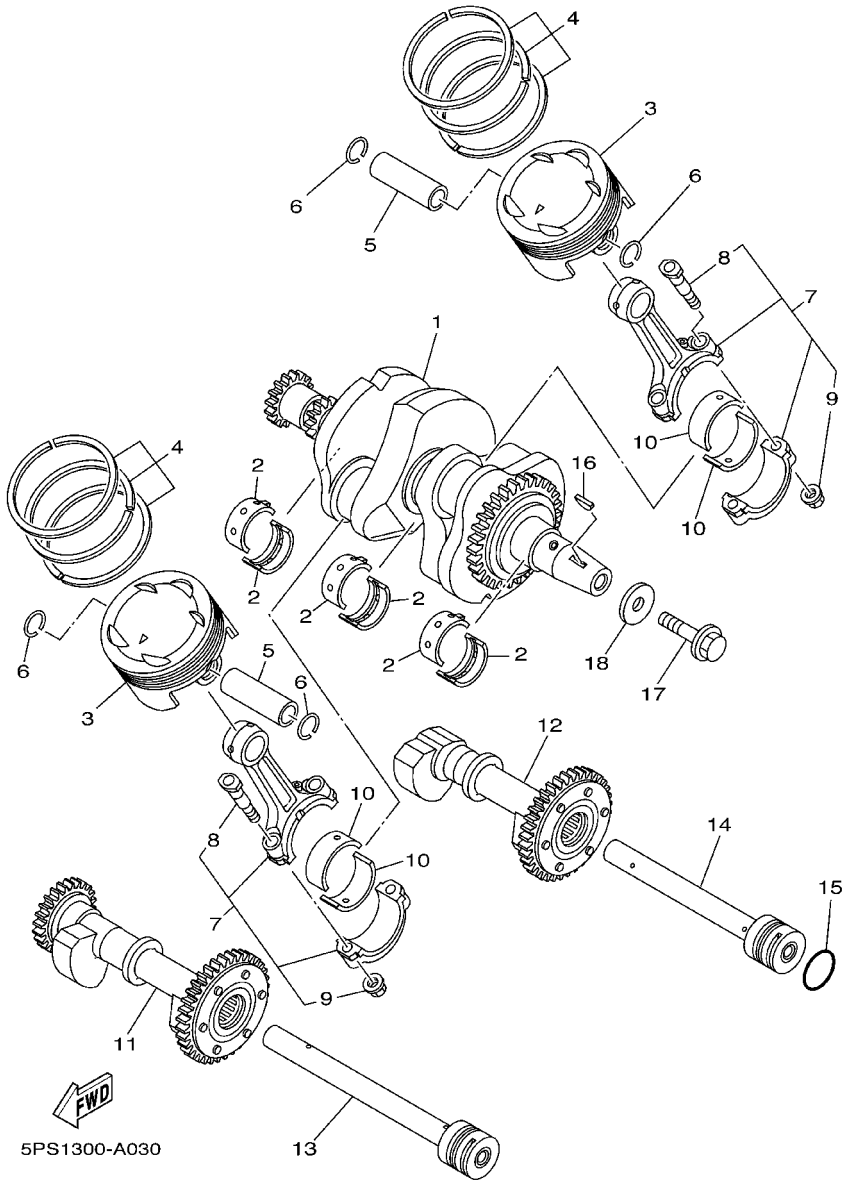

FIG. 3 CRANKSHAFT. PISTON

REF. NO.	PART NO.	DESCRIPTION	5PS1	5PS2				REMARKS
1	5PS–11400–00	CRANKSHAFT ASSY	1	1				
2	3LD–11416–00	PLANE BEARING, CRANKSHAFT 1	6	6				UR BLUE
	3LD–11416–10	PLANE BEARING, CRANKSHAFT 1	6	6				UR BLACK
	3LD–11416–20	PLANE BEARING, CRANKSHAFT 1	6	6				UR BROWN
	3LD–11416–30	PLANE BEARING, CRANKSHAFT 1	6	6				UR GREEN
	3LD–11416–40	PLANE BEARING, CRANKSHAFT 1	6	6				UR YELLOW
	3LD–11416–50	PLANE BEARING, CRANKSHAFT 1	6	6				UR PINK
	3LD–11416–60	PLANE BEARING, CRANKSHAFT 1	6	6				UR RED
3	5PS–11631–00	PISTON (STD)	2	2				
4	5BE–11603–00	PISTON RING SET (STD)	2	2				
5	5PS–11633–00	PIN, PISTON	2	2				
6	93450–22146	CIRCLIP	4	4				
7	5PS–11650–00	CONNECTING ROD ASSY	2	2				
8	3LD–11654–00	.BOLT, CONNECTING ROD	2	2				
9	90179–09379	.NUT	2	2				
10	3LD–11656–00	PLANE BEARING, CONNECTING ROD	4	4				UR BLUE
	3LD–11656–10	PLANE BEARING, CONNECTING ROD	4	4				UR BLACK
	3LD–11656–20	PLANE BEARING, CONNECTING ROD	4	4				UR BROWN
	3LD–11656–30	PLANE BEARING, CONNECTING ROD	4	4				UR GREEN
11	4NX–11500–00	BALANCER ASSY	1	1				
12	4NX–11510–00	BALANCER ASSY, 2	1	1				
13	3LD–11583–00	SHAFT, BALANCER 1	1	1				
14	3LD–11584–00	SHAFT, BALANCER 2	1	1				
15	93210–30660	O–RING	1	1				
16	90280–05029	KEY, WOODRUFF	1	1				
17	90105–12584	BOLT, FLANGE	1	1				
18	90201–121H0	WASHER, PLATE	1	1				

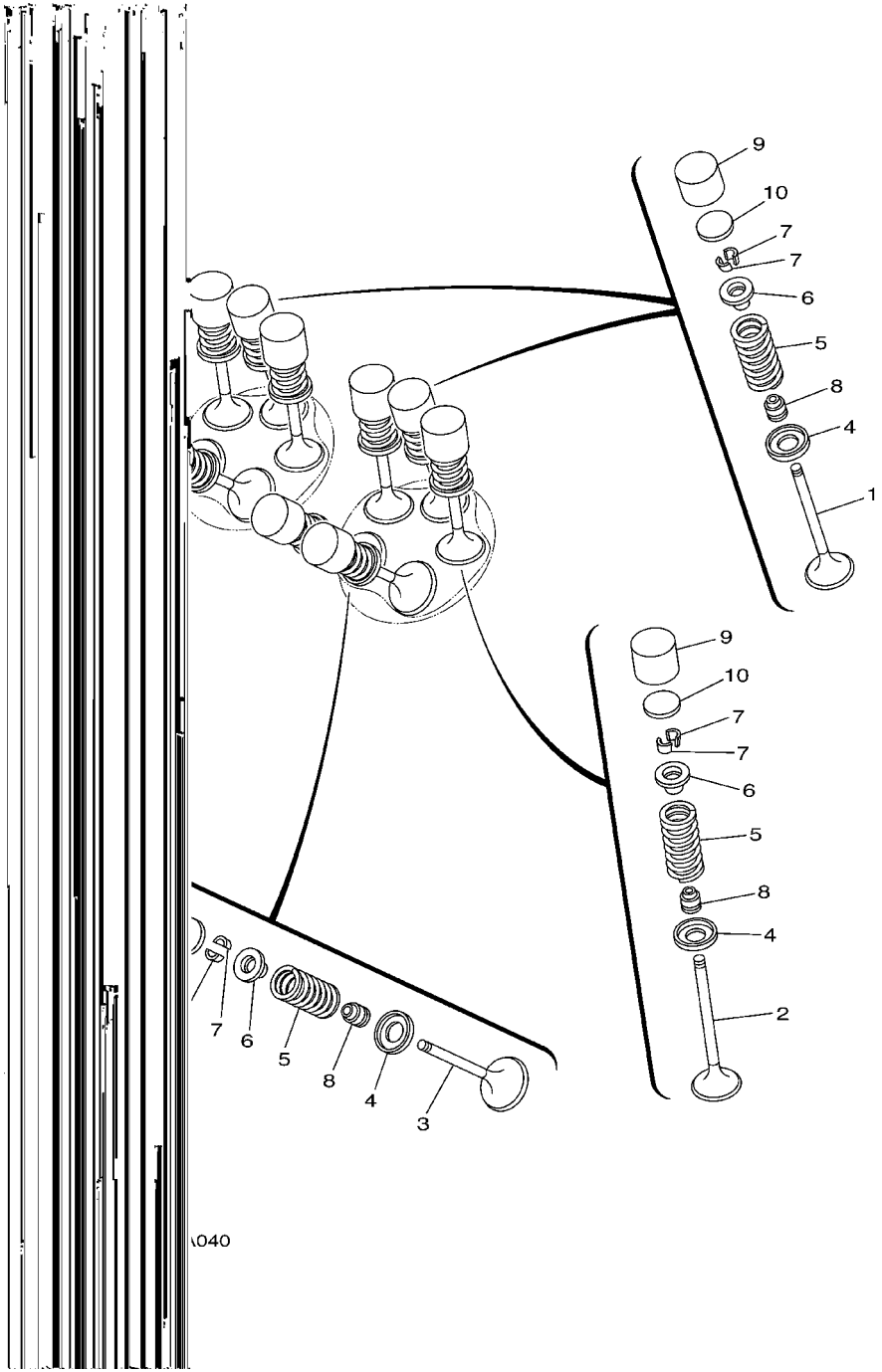

FIG. 4 VALVE

REF. NO.	PART NO.	DESCRIPTION	5PS1	5PS2				REMARKS
1	3LD–12111–01	VALVE, INTAKE (3LD.)	2	2				
2	3LD–12112–01	VALVE, INTAKE 2 (3LD:)	4	4				
3	5PS–12121–00	VALVE, EXHAUST	4	4				
4	1WG–12116–00	SEAT, VALVE SPRING	10	10				
5	3LD–12113–00	SPRING, VALVE INNER	10	10				BLUE
6	3LD–12117–00	RETAINER, VALVE SPRING	10	10				
7	3LD–12118–00	COTTER, VALVE	20	20				
8	51Y–12119–00	SEAL, VALVE STEM	10	10				
9	1WG–12153–21	LIFTER, VALVE	10	10				UR BLUE
	1WG–12153–31	LIFTER, VALVE	10	10				UR RED
10	3LD–12168–00	PAD, ADJUSTING (1.20)	10	10				UR
	3LD–12168–20	PAD, ADJUSTING (1.25)	10	10				UR
	3LD–12168–40	PAD, ADJUSTING (1.30)	10	10				UR
	3LD–12168–60	PAD, ADJUSTING (1.35)	10	10				UR
	3LD–12168–80	PAD, ADJUSTING (1.40)	10	10				UR
	3LD–12168–A0	PAD, ADJUSTING (1.45)	10	10				UR
	3LD–12168–F0	PAD, ADJUSTING (1.50)	10	10				UR
	3LD–12168–H1	PAD, ADJUSTING (1.55)	10	10				UR
	3LD–12168–K1	PAD, ADJUSTING (1.60)	10	10				UR
	3LD–12168–M1	PAD, ADJUSTING (1.65)	10	10				UR
	3LD–12168–R1	PAD, ADJUSTING (1.70)	10	10				UR
	3LD–12168–U1	PAD, ADJUSTING (1.75)	10	10				UR
	3LD–12168–W1	PAD, ADJUSTING (1.80)	10	10				UR
	3LD–12168–Y1	PAD, ADJUSTING (1.85)	10	10				UR
	3LD–12169–11	PAD, ADJUSTING (1.90)	10	10				UR
	3LD–12169–31	PAD, ADJUSTING (1.95)	10	10				UR
	3LD–12169–50	PAD, ADJUSTING (2.00)	10	10				UR

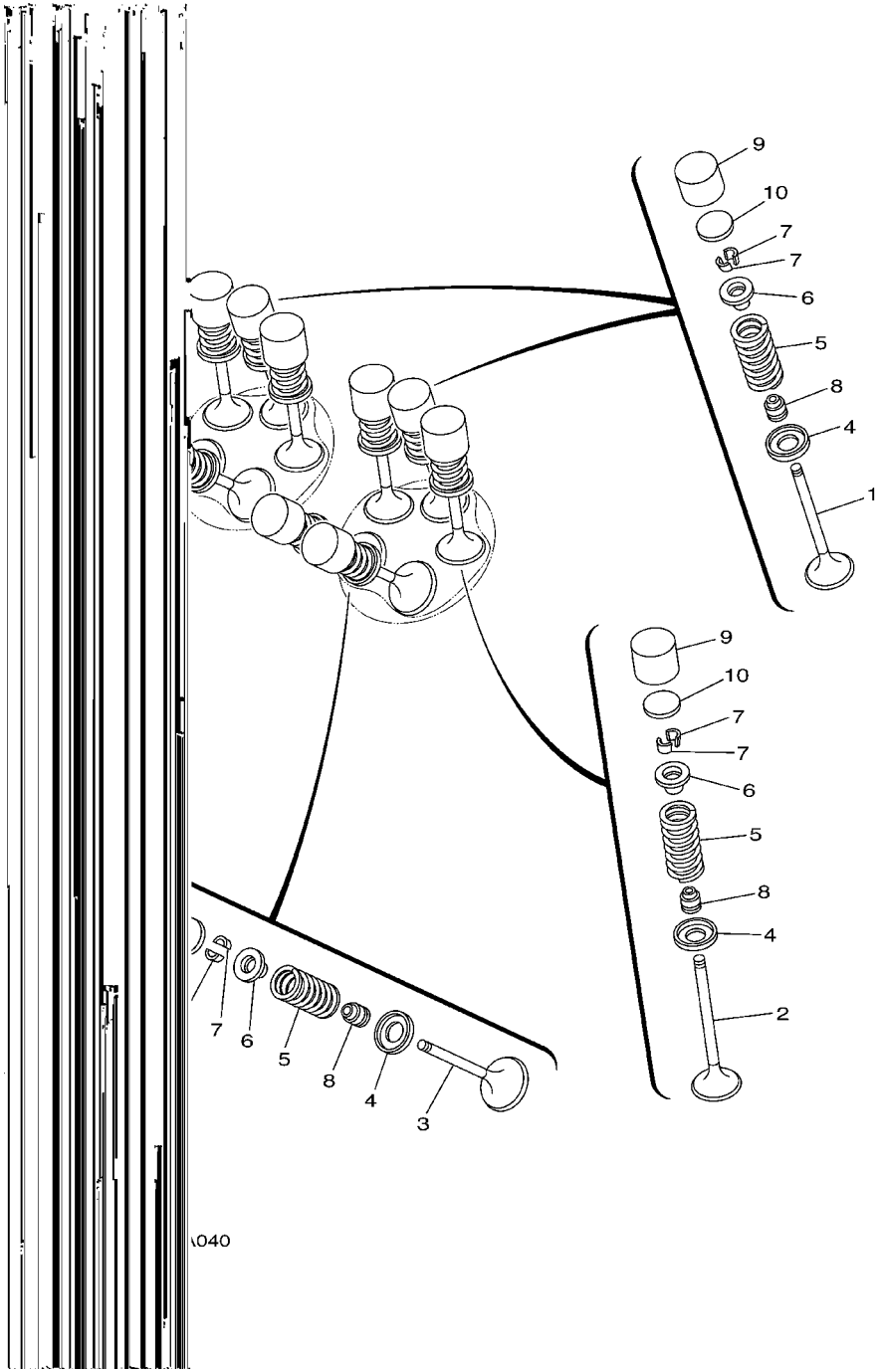

FIG. 4 VALVE

REF. NO.	PART NO.	DESCRIPTION	5PS1	5PS2				REMARKS
10	3LD–12169–70	PAD, ADJUSTING (2.05)	10	10				UR
	3LD–12169–90	PAD, ADJUSTING (2.10)	10	10				UR
	3LD–12169–E0	PAD, ADJUSTING (2.15)	10	10				UR
	3LD–12169–G0	PAD, ADJUSTING (2.20)	10	10				UR
	3LD–12169–J0	PAD, ADJUSTING (2.25)	10	10				UR
	3LD–12169–L0	PAD, ADJUSTING (2.30)	10	10				UR
	3LD–12169–N0	PAD, ADJUSTING (2.35)	10	10				UR
	3LD–12169–T0	PAD, ADJUSTING (2.40)	10	10				UR

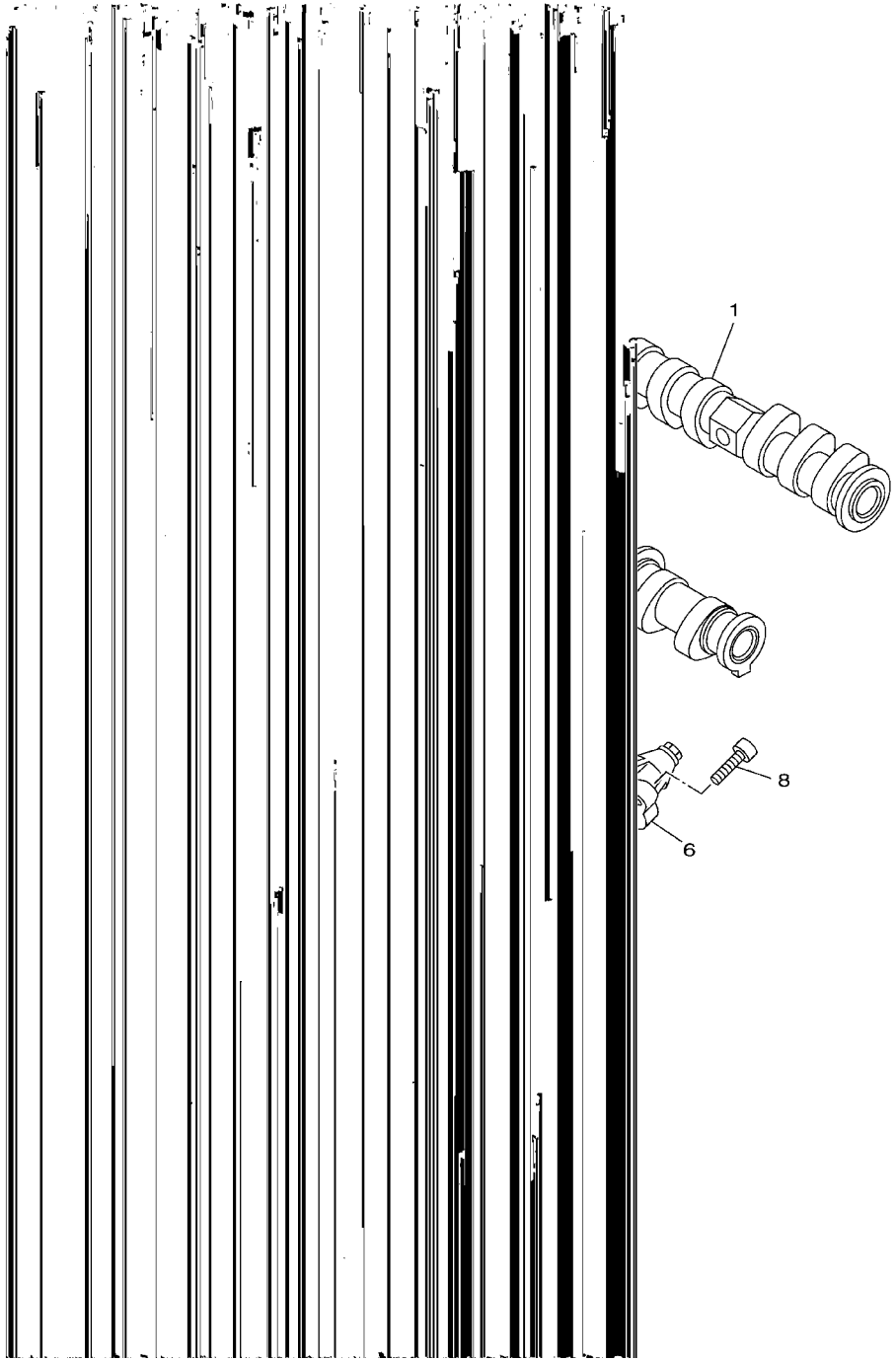

FIG. 5 CAMSHAFT. CHAIN

REF. NO.	PART NO.	DESCRIPTION	5PS1	5PS2				REMARKS
1	5PS–12171–00	CAMSHAFT 1	1	1				
2	5PS–12180–00	CAMSHAFT ASSY 2	1	1				
3	3LD–12176–00	SPROCKET, CAM CHAIN	2	2				
4	90105–07342	BOLT, FLANGE	4	4				
5	94591–40138	CHAIN (82RH2015–138L)	1	1				
6	5PS–12210–00	TENSIONER ASSY, CAM CHAIN	1	1				
7	5JW–12213–00	GASKET, TENSIONER CASE	1	1				
8	91314–06020	BOLT	2	2				
9	3LD–12251–00	DAMPER, CHAIN 1	1	1				
10	5PS–12252–00	DAMPER, CHAIN 2	1	1				
11	3LD–12247–00	SHAFT, TENSIONER	1	1				
12	5BE–12241–00	GUIDE, STOPPER 2	1	1				

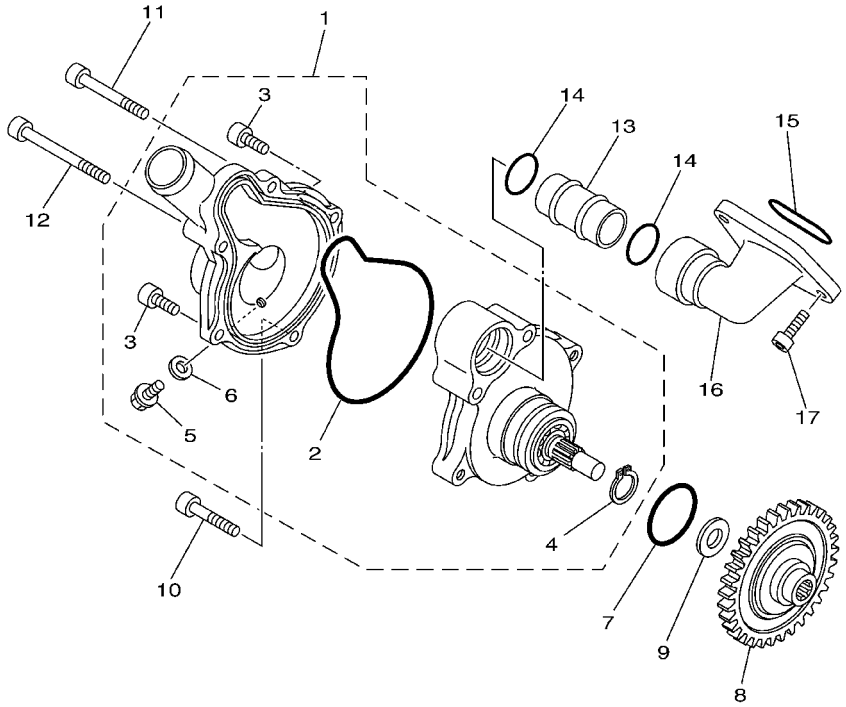

5PS1300-A060

FIG. 7 RADIATOR. HOSE

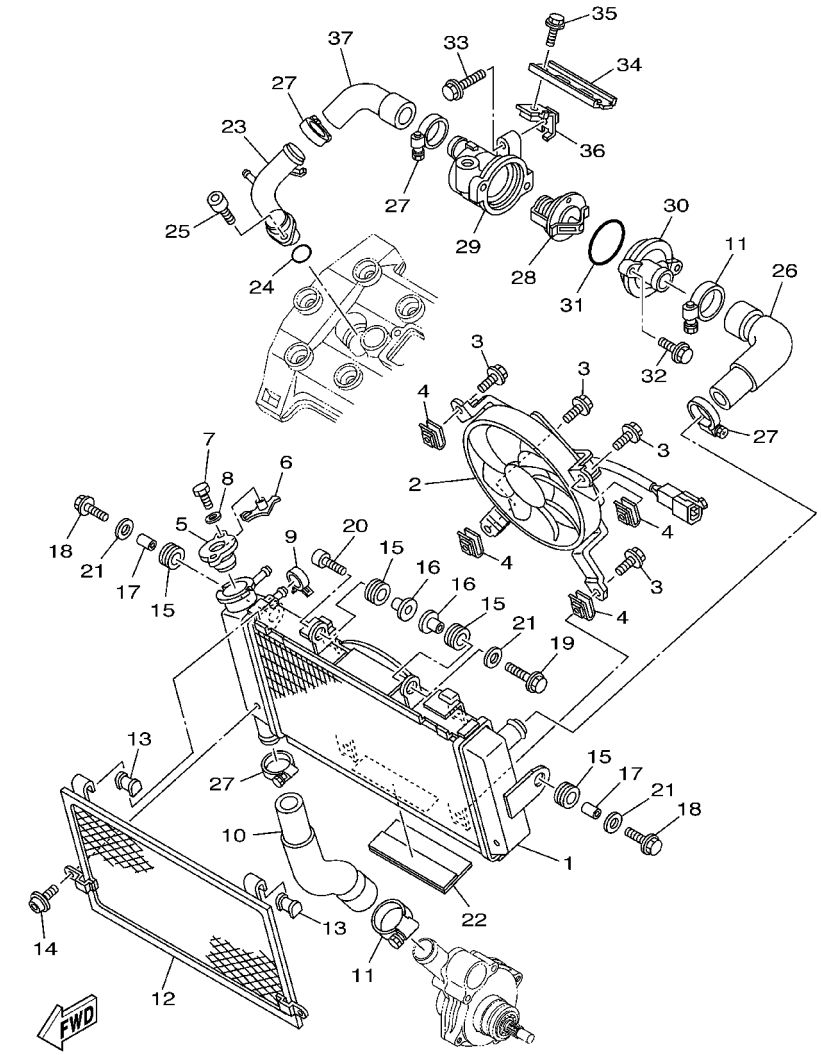

5PS1300-A070

1	5PS-12461-00	RADIATOR ASSY	1	1
2	5PS-12405-00	BLOWER ASSY	1	1
3	90119-06044	BOLT, WITH WASHER	4	4
4	1AA-12535-00	PLATE	4	4
5	4FL-12462-00	CAP, RADIATOR	1	1
6	1KT-12437-00	STOPPER	1	1
7	97007-05012	BOLT	1	1
8	92907-05600	WASHER, PLATE	1	1
9	90467-10038	CLIP	1	1
10	5PS-12578-00	HOSE 3	1	1
11	90450-			

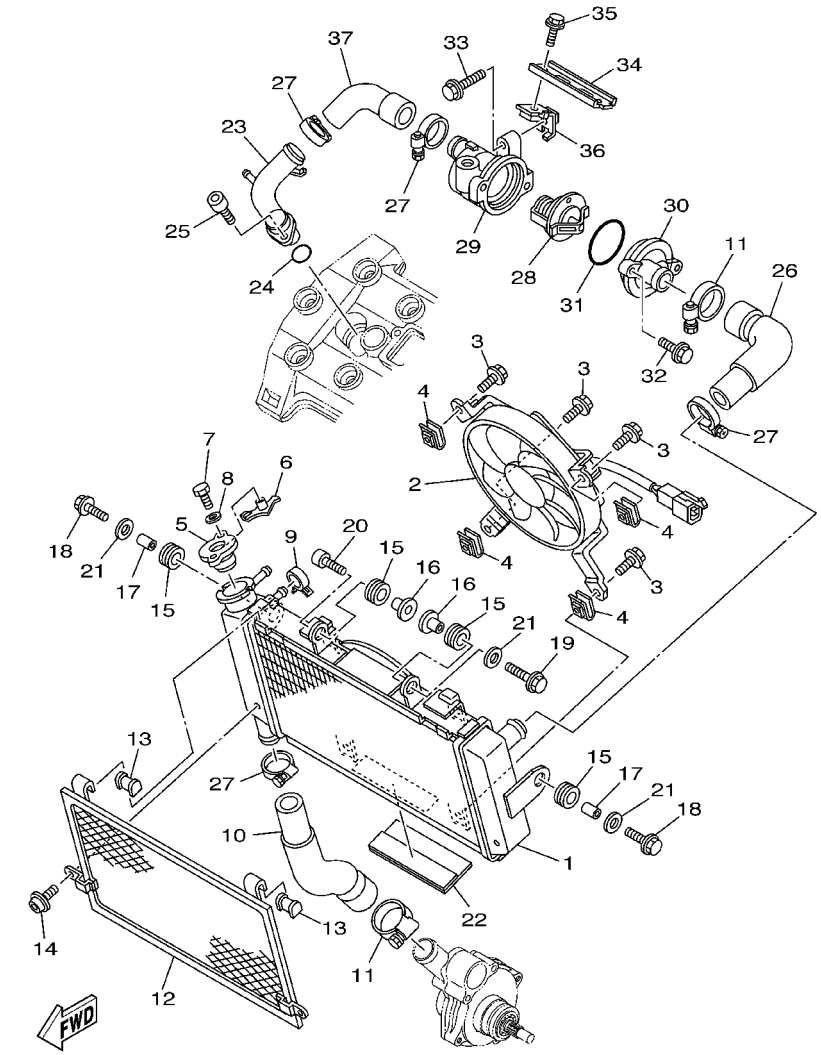

5PS1300-A070

FIG. 7 RADIATOR. HOSE

REF. NO.	PART NO.	DESCRIPTION	5PS1	5PS2				REMARKS
28	1AE–12410–00	THERMOSTAT ASSY	1	1				
29	5PS–12417–00	HOUSING, THERMOSTAT	1	1				
30	4NX–12413–00	COVER, THERMOSTAT	1	1				
31	93210–49046	O–RING	1	1				
32	95027–06020	BOLT, FLANGE	2	2				
33	95027–06025	BOLT, FLANGE	1	1				
34	5PS–1244E–00	BRACKET 1	1	1				
35	95027–06010	BOLT, FLANGE	2	2				
36	5PS–1244F–00	BRACKET 1	1	1				
37	5PS–12579–00	HOSE 4	1	1				

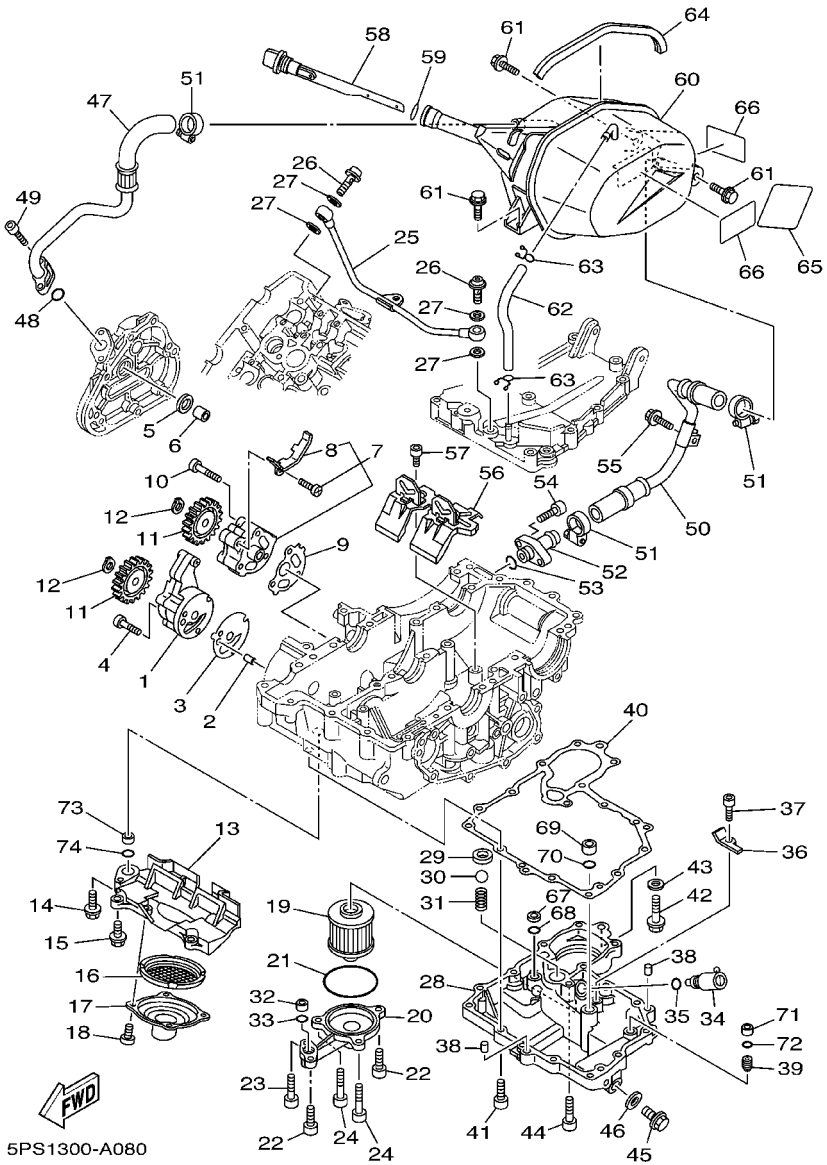

FIG. 8 OIL PUMP

REF. NO.	PART NO.	DESCRIPTION	5PS1	5PS2				REMARKS
1	3LD–13300–00	OIL PUMP ASSY	1	1				
2	99530–08012	PIN, DOWEL	1	1				
3	5PS–13329–00	GASKET, PUMP COVER	1	1				
4	98507–06045	SCREW, PAN HEAD	3	3				
5	90430–14131	GASKET	1	1				
6	90387–120W5	COLLAR	1	1				
7	4NX–13303–00	OIL PUMP ASSY, 2	1	1				
8	3LD–13371–00	.PLATE	1	1				
9	3LD–13339–00	GASKET, PUMP COVER	1	1				
10	98507–06035	SCREW, PAN HEAD	3	3				
11	3VD–13325–00	GEAR, PUMP DRIVEN	2	2				
12	99009–11400	CIRCLIP	2	2				
13	3VD–13412–00	HOUSING, STRAINER	1	1				
14	95027–06025	BOLT, FLANGE	1	1				
15	95027–06020	BOLT, FLANGE	4	4				
16	3VD–13415–00	SEAL, OIL STRAINER	1	1				
17	5PS–13411–00	STRAINER, OIL	1	1				
18	90110–06018	BOLT, HEXAGON SOCKET HEAD	4	4				
19	5JX–13440–00	ELEMENT ASSY, OIL CLEANER	1	1				
20	5PS–13447–00	COVER, OIL ELEMENT	1	1				
21	93210–64297	O–RING	1	1				
22	91314–06020	BOLT	2	2				
23	91314–06030	BOLT	1	1				
24	91314–06040	BOLT	2	2				
25	5PS–13161–00	PIPE, DELIVERY 1	1	1				
26	90401–10002	BOLT, UNION	2	2				
27	90430–10188	GASKET	4	4				

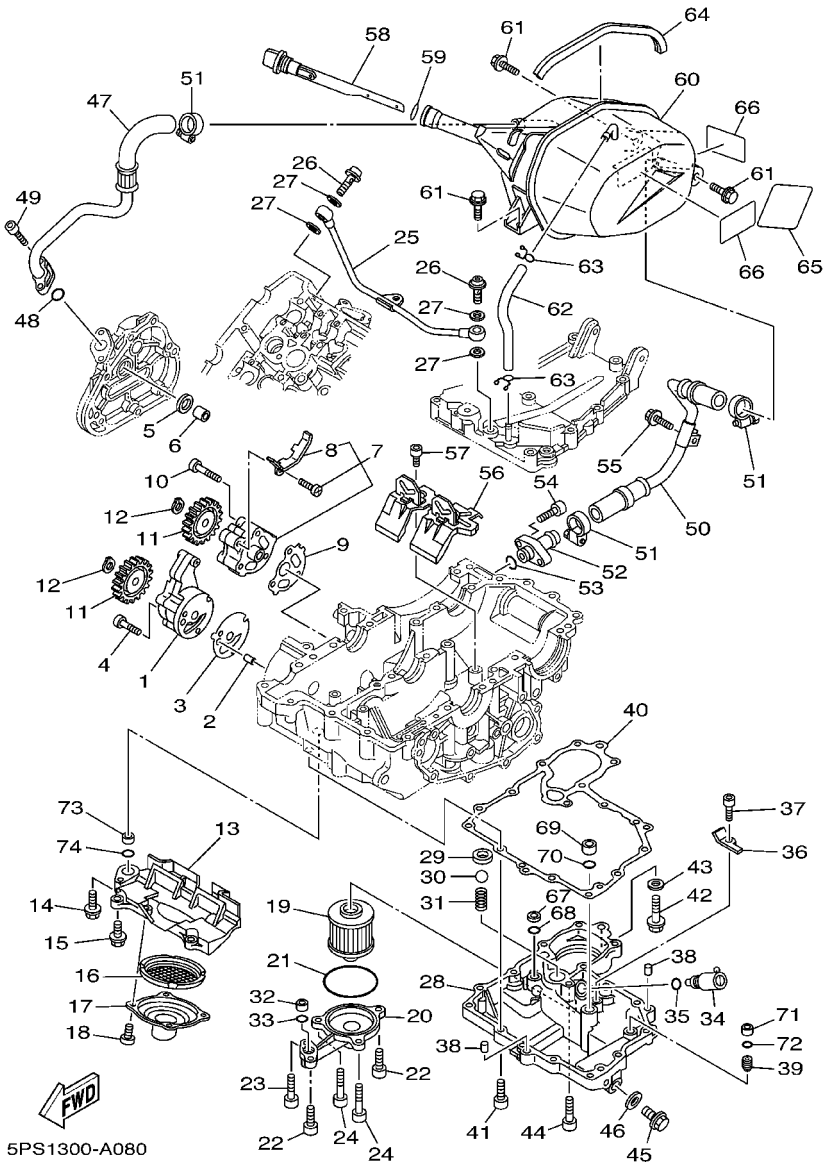

FIG. 8 OIL PUMP

REF. NO.	PART NO.	DESCRIPTION	5PS1	5PS2				REMARKS
28	5PS–13417–00	COVER, STRAINER	1	1				
29	3LD–13113–00	SEAT, CHECK BALL	1	1				
30	93505–08030	BALL	1	1				
31	90501–104F9	SPRING, COMPRESSION	1	1				
32	90387–106W6	COLLAR	1	1				
33	93210–12790	O–RING	1	1				
34	11H–13490–00	RELIEF VALVE ASSY	1	1				
35	93210–10096	O–RING	1	1				
36	3LD–13151–00	STAY	1	1				
37	90110–06018	BOLT, HEXAGON SOCKET HEAD	1	1				
38	99530–08016	PIN, DOWEL	2	2				
39	4H7–15138–00	NOZZLE 1	1	1				
40	5PS–13414–00	GASKET, STRAINER COVER	1	1				
41	91314–06025	BOLT	13	13				
42	95024–10040	BOLT, FLANGE	1	1				
43	90430–10188	GASKET	1	1				
44	91314–06035	BOLT	1	1				
45	90340–14132	PLUG, STRAIGHT SCREW	1	1				
46	214–11198–01	GASKET	1	1				
47	5PS–13464–00	HOSE, OIL 1	1	1				
48	93210–13657	O–RING	1	1				
49	91314–06020	BOLT	2	2				
50	5PS–13465–00	HOSE, OIL 2	1	1				
51	90450–25037	HOSE CLAMP ASSY	3	3				
52	3VD–13416–00	PIPE, OIL 1	1	1				
53	93210–13657	O–RING	1	1				
54	90110–06093	BOLT, HEXAGON SOCKET HEAD	2	2				

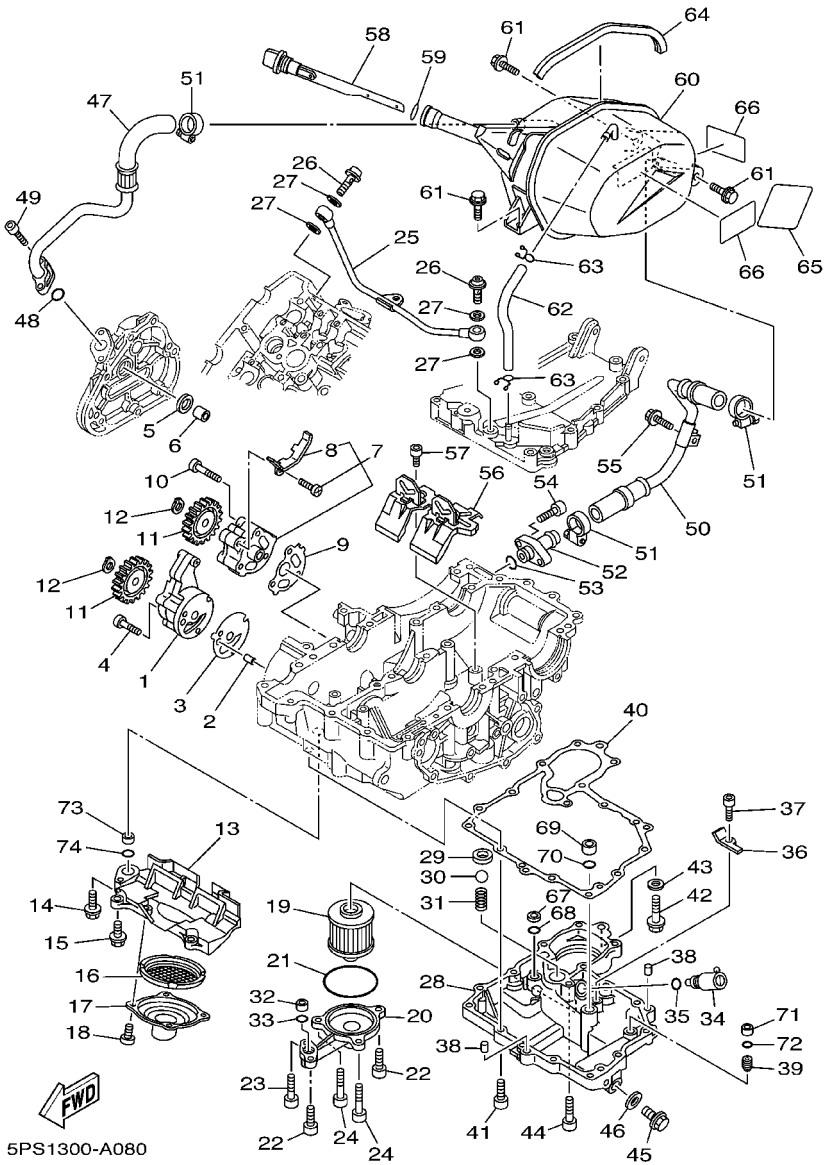

FIG. 8 OIL PUMP

REF. NO.	PART NO.	DESCRIPTION	5PS1	5PS2				REMARKS
55	90109-06056	BOLT	1	1				
56	5PS-13317-00	PLATE, BAFFLE	1	1				
57	90110-06018	BOLT, HEXAGON SOCKET HEAD	2	2				
58	5PS-21761-00	GAUGE, LEVEL	1	1				
59	93210-21190	O-RING	1	1				
60	5PS-21750-00	OIL TANK ASSY	1	1				
61	95827-06014	BOLT, FLANGE	3	3				
62	90445-11026	HOSE	1	1				
63	90467-10008	CLIP	2	2				
64	5JX-24188-00	MOLD, FUEL TANK	1	1				
65	5BM-21652-00	PROTECTOR	1	1				
66	5BM-21268-00	SEAL	2	2				
67	90387-085N0	COLLAR	1	1				
68	93210-10096	O-RING	1	1				
69	90387-106W6	COLLAR	1	1				
70	93210-12790	O-RING	1	1				
71	90387-06761	COLLAR	1	1				
72	93210-07135	O-RING	1	1				
73	90387-130W6	COLLAR	1	1				
74	93210-15566	O-RING	1	1				

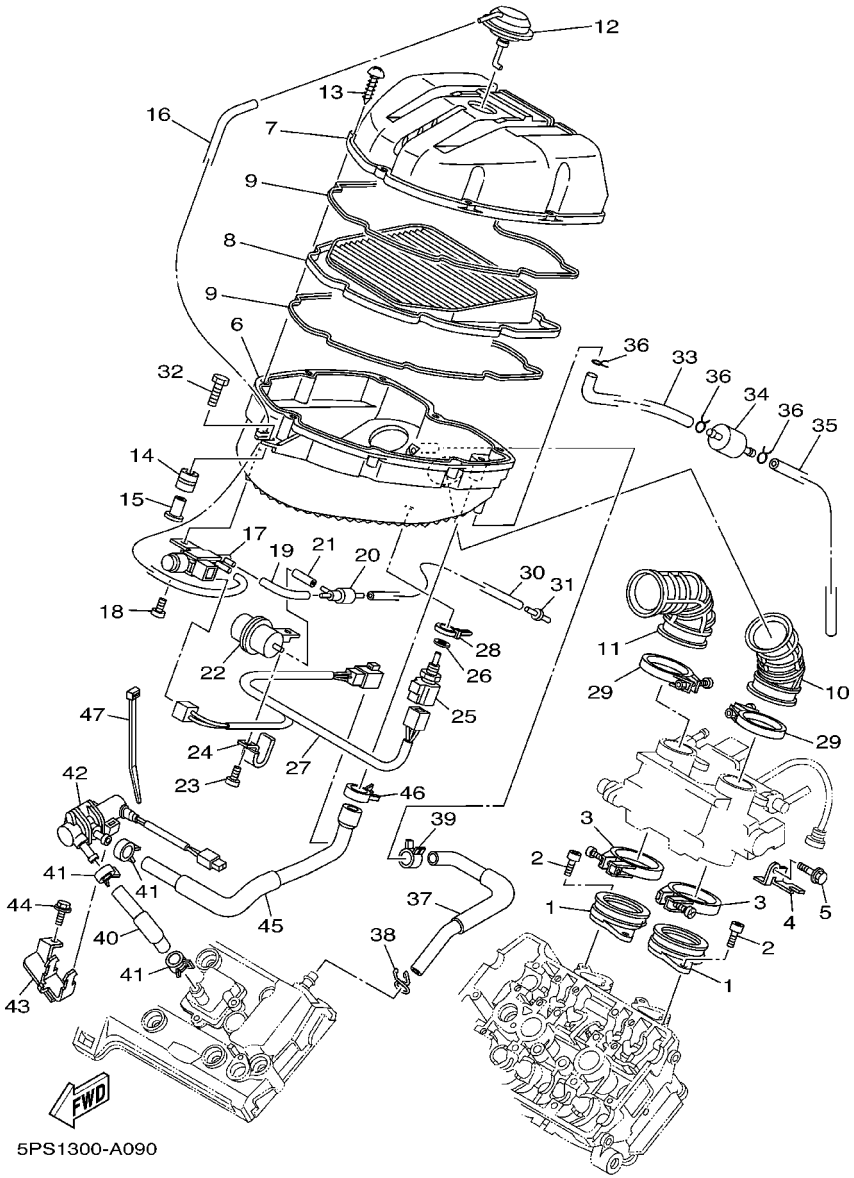

FIG. 9 INTAKE

REF. NO.	PART NO.	DESCRIPTION	5PS1	5PS2				REMARKS
1	5PS-13586-00	JOINT, CARBURETOR 1	2	2				
2	91317-06020	BOLT	4	4				
3	90450-63001	HOSE CLAMP ASSY	2	2				
4	5PS-14414-00	STAY 2	1	1				
5	95027-06010	BOLT, FLANGE	1	1				
6	5PS-14411-00	CASE, AIR CLEANER 1	1	1				
7	5PS-14421-00	CASE, AIR CLEANER 2	1	1				
8	5PS-14451-00	ELEMENT, AIR CLEANER	1	1				
9	5PS-14452-00	SEAL	2	2				
10	5PS-14453-00	JOINT, AIR CLEANER 1	1	1				
11	5PS-14463-00	JOINT, AIR CLEANER 2	1	1				
12	5PS-14545-00	DIAPHRAGM	1	1				
13	97707-50020	SCREW, TAPPING	8	8				
14	5PS-14435-00	GROMMET	1	1				
15	5PS-14264-00	COLLAR	1	1				
16	5PS-14419-00	PIPE	1	1				
17	5PS-1410H-00	FUEL CUT SOLENOID VALVE	1	1				
18	98907-05012	SCREW, BIND	1	1				
19	5PS-14148-00	PIPE	1	1				
20	5PS-14552-00	VALVE, CHECK	1	1				
21	90445-08010	HOSE	1	1				
22	5PS-1446E-00	TANK, SURGE	1	1				
23	98907-05016	SCREW, BIND	1	1				
24	90462-05005	CLAMP	1	1				
25	4BH-83591-00	THERMO UNIT	1	1				
26	90430-12202	GASKET	1	1				
27	5PS-82386-00	EXTENSION, WIRE HARNESS	1	1				

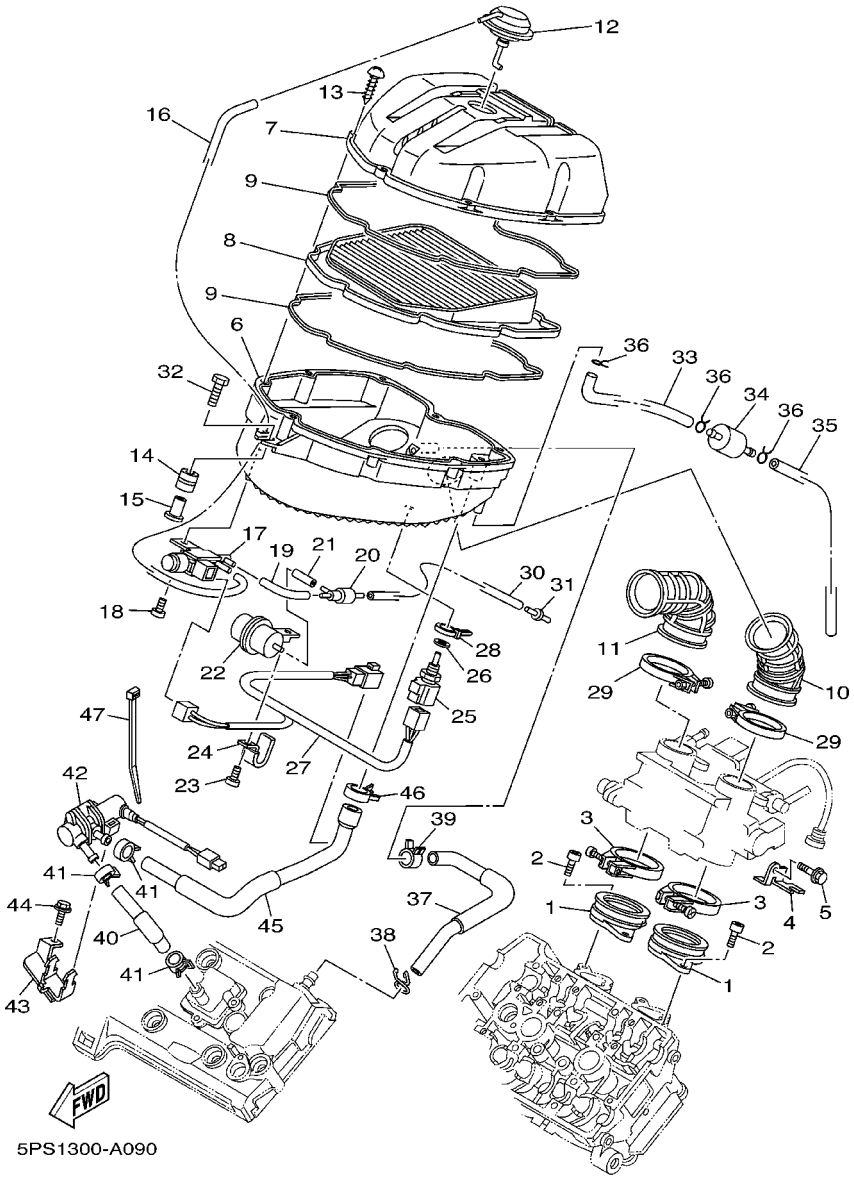

FIG. 9 INTAKE

REF. NO.	PART NO.	DESCRIPTION	5PS1	5PS2				REMARKS
28	5Y9–12491–00	CLAMP 1	1	1				
29	90450–52602	HOSE CLAMP ASSY	2	2				
30	90445–08012	HOSE	1	1				
31	5PS–14568–00	JOINT	1	1				
32	90119–06214	BOLT, WITH WASHER	1	1				
33	5PS–1443E–00	PIPE, DRAIN	1	1				
34	4X7–2149Y–00	FILTER ASSY	1	1				
35	90445–116H6	HOSE (L570)	1	1				
36	90467–11106	CLIP	3	3				
37	5PS–11166–00	PIPE, BREATHER 1	1	1				
38	90467–14015	CLIP	1	1				
39	90468–08104	CLIP	1	1				
40	5PS–14881–00	HOSE, BEND 1	1	1				
41	90467–17003	CLIP	3	3				
42	5PS–14840–00	AIR CUT VALVE ASS'Y	1	1				
43	5PS–14834–00	STAY	1	1				
44	95027–06010	BOLT, FLANGE	1	1				
45	5PS–14882–00	HOSE, BEND 2	1	1				
46	90467–20086	CLIP	1	1				
47	90465–10098	CLAMP	1	1				

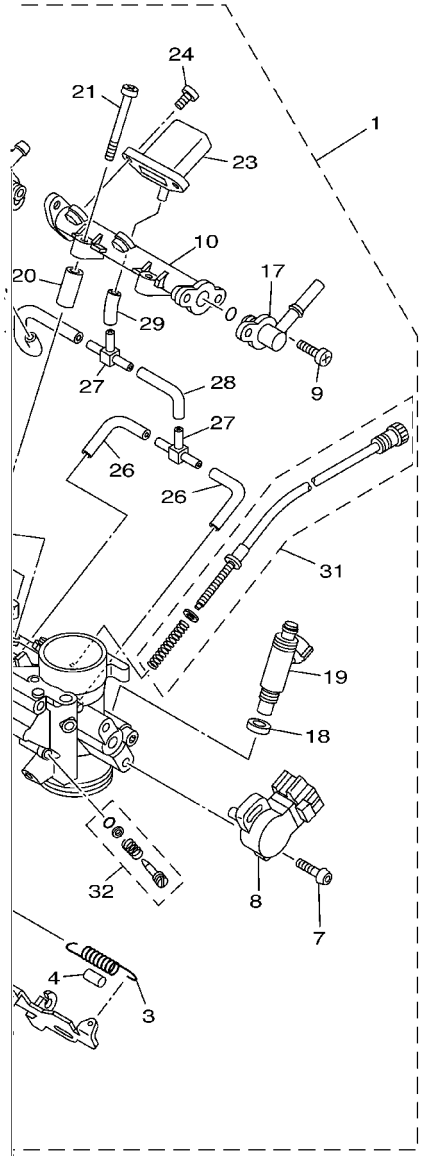

FIG. 10 INTAKE 2

REF. NO.	PART NO.	DESCRIPTION	5PS1	5PS2				REMARKS
1	5PS-13750-00	THROTTLE BODY ASSY	1	1				
2	5Y9-12491-00	.CLAMP 1	2	2				
3	5JW-14589-00	.SPRING	1	1				
4	5DM-14936-00	.SEAT, SPRING	1	1				
5	98507-05030	.SCREW, PAN HEAD	2	2				
6	98507-05014	.SCREW, PAN HEAD	2	2				
7	8CC-14216-10	.SCREW	2	2				
8	5PS-85885-00	.THROTTLE POSITION SENSOR ASSY	1	1				
9	98507-05010	.SCREW, PAN HEAD	2	2				
10	5PS-13938-00	.PIPE	1	1				
11	90467-11090	.CLIP	2	2				
12	5PS-1243E-00	.HOSE 2	1	1				
13	98507-05010	.SCREW, PAN HEAD	2	2				
14	5PS-13906-00	.REGULATOR, PRESSURE	1	1				
15	5PS-1243A-00	.HOSE 1	1	1				
16	90467-09037	.CLIP	1	1				
17	5PS-12881-00	.PIPE,FUEL INJECTION 1	1	1				
18	90430-09002	.GASKET	2	2				
19	5PS-13761-00	.INJECTOR ASSY	2	2				
20	5PS-14996-00	.PIPE	2	2				
21	98507-06045	.SCREW, PAN HEAD	1	1				
22	5PS-82509-00	.WIRE, SUB LEAD	1	1				
23	5PS-82380-00	.SENSOR, PRESSURE	1	1				
24	92501-06014	.SCREW, PAN HEAD	2	2				
25	5PS-14349-01	.PIPE	1	1				
26	5PS-14987-00	.HOSE	2	2				
27	68V-24376-00	.PIPE, JOINT 1	2	2				

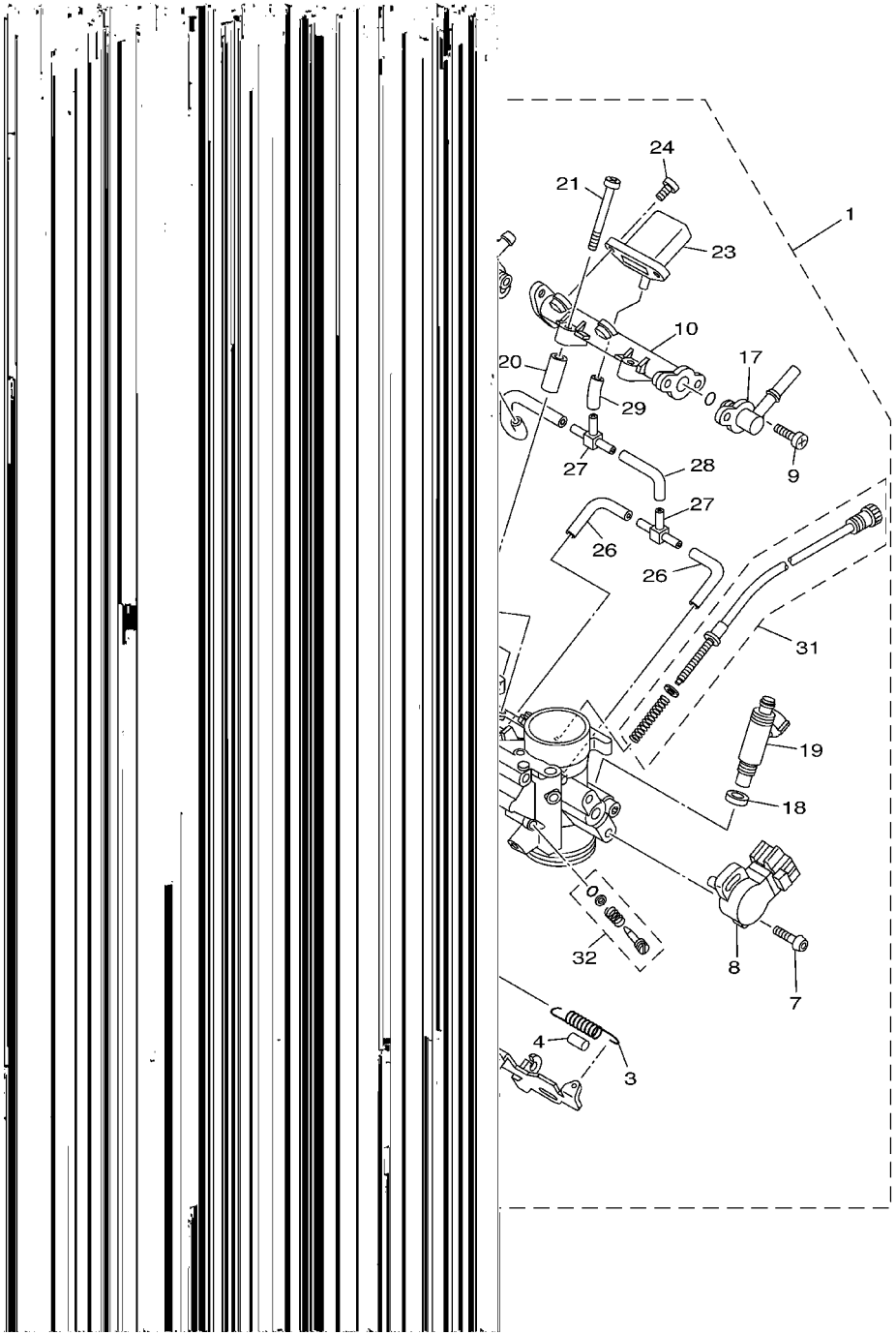

FIG. 10 INTAKE 2

REF. NO.	PART NO.	DESCRIPTION	5PS1	5PS2				REMARKS
28	5JW–24311–00	.PIPE, FUEL 1	1	1				
29	5FL–14348–10	.PIPE 1	1	1				
30	5FL–14348–00	.PIPE 1	1	1				
31	5PS–14103–00	.THROTTLE SCREW SET	1	1				
32	5JW–14104–00	.AIR SCREW SET	1	1				

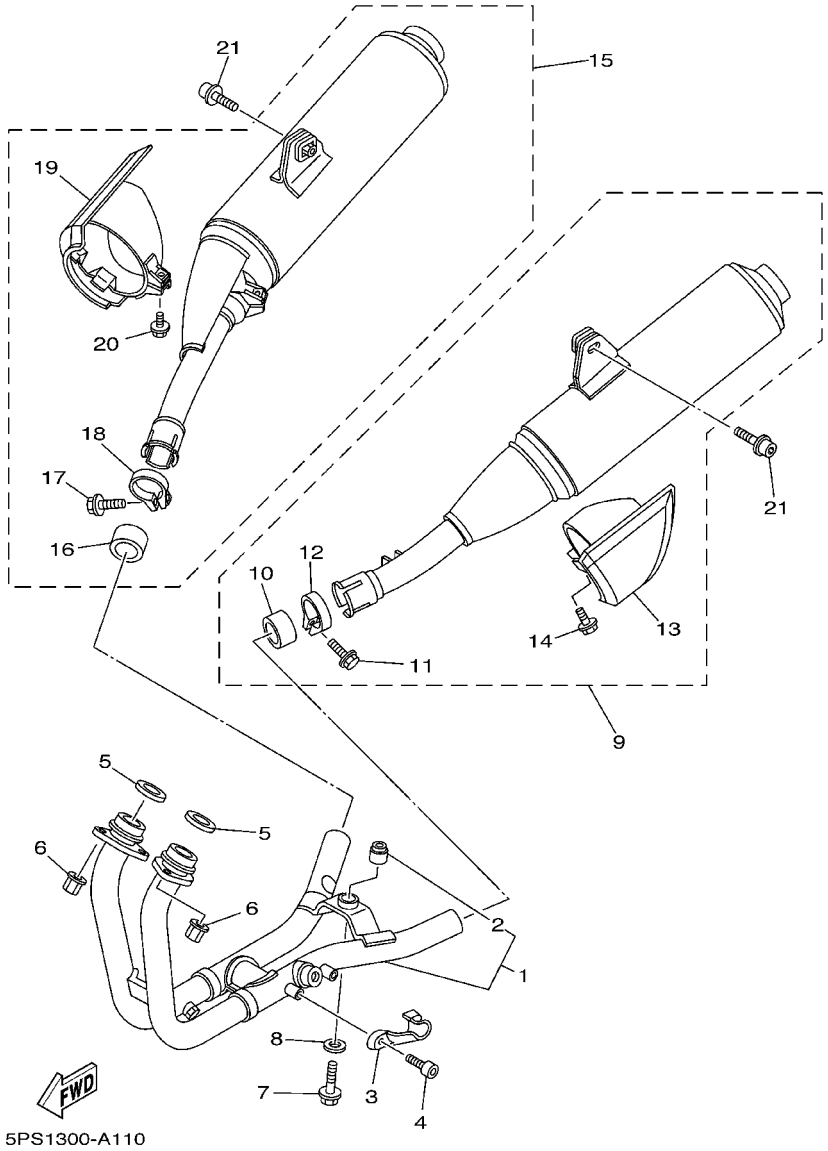

FIG. 11 EXHAUST

REF. NO.	PART NO.	DESCRIPTION	5PS1	5PS2				REMARKS
1	5PS–14610–00	EXHAUST PIPE ASSY 1	1	1				
2	36Y–27414–00	.DAMPER, FOOTREST	1	1				
3	5PS–14628–00	PROTECTOR, EXHAUST PIPE	1	1				
4	91380–06010	BOLT	2	2				
5	3VD–14613–00	GASKET, EXHAUST PIPE	2	2				
6	90179–08410	NUT	4	4				
7	90109–08044	BOLT	1	1				
8	90201–08753	WASHER, PLATE	1	1				
9	5PS–14710–00	MUFFLER ASSY 1	1	1				
10	5PX–14755–00	.GASKET, SILENCER	1	1				
11	95024–08025	.BOLT, FLANGE	1	1				
12	5PS–14715–00	.BAND, MUFFLER	1	1				
13	5PS–14738–00	.PROTECTER, MUFFLER 3	1	1				
14	95024–06012	.BOLT, FLANGE	1	1				
15	5PS–14720–00	MUFFLER ASSY 2	1	1				
16	5PX–14755–00	.GASKET, SILENCER	1	1				
17	95024–08025	.BOLT, FLANGE	1	1				
18	5PS–14725–00	.BAND, MUFFLER	1	1				
19	5PS–14748–00	.PROTECTOR, MUFFLER 4	1	1				
20	95024–06012	.BOLT, FLANGE	1	1				
21	90109–087F1	BOLT	2	2				

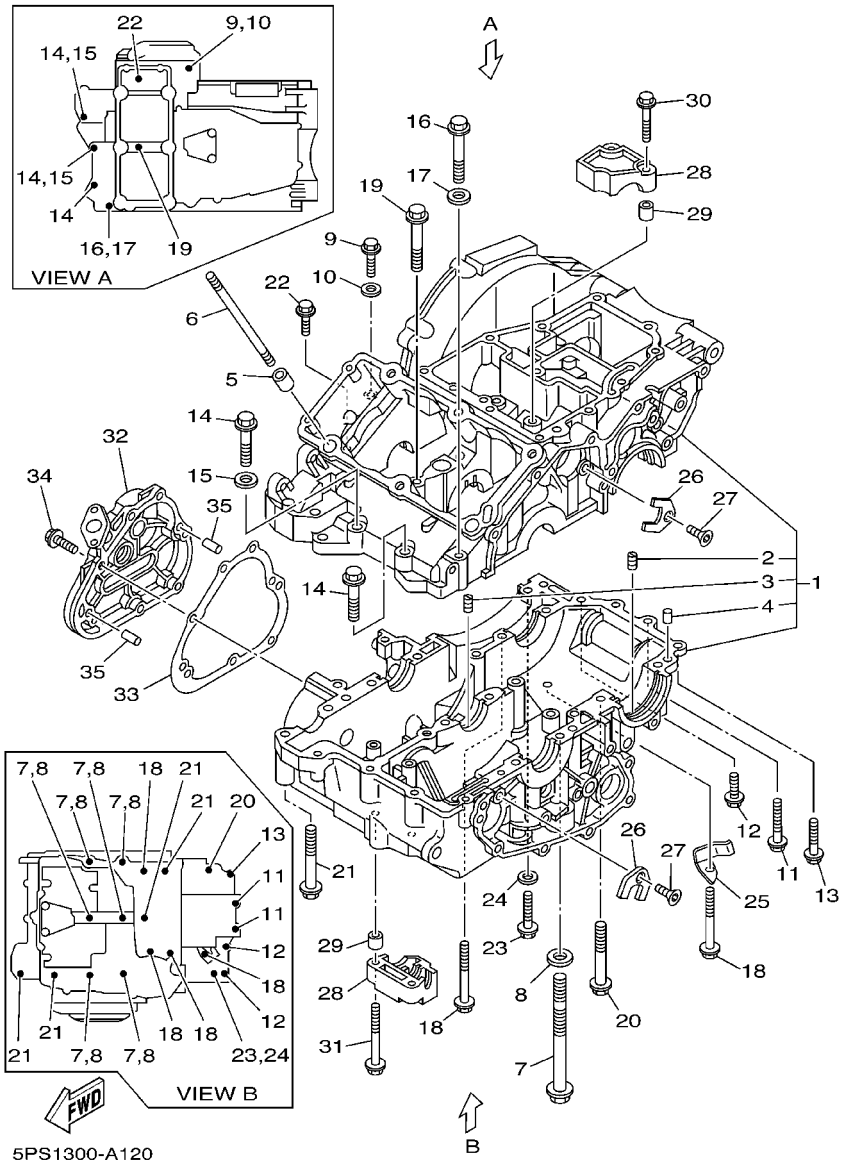

FIG. 12 CRANKCASE

REF. NO.	PART NO.	DESCRIPTION	5PS1	5PS2				REMARKS
1	5PS–15100–00	CRANKCASE ASSY	1	1				
2	4XV–15138–00	.NOZZLE 1	1	1				
3	4G0–15138–00	.NOZZLE 1	1	1				
4	99530–10114	.PIN, DOWEL	1	1				
5	99530–14016	PIN, DOWEL	2	2				
6	3LD–11361–00	BOLT, CYLINDER HOLDING 1	6	6				
7	90105–10560	BOLT, FLANGE	6	6				
8	90201–11597	WASHER, PLATE	6	6				
9	95814–06040	BOLT, FLANGE	1	1				
10	90201–066F0	WASHER, PLATE	1	1				
11	95817–06055	BOLT, FLANGE	2	2				
12	95817–06020	BOLT, FLANGE	2	2				
13	95817–06030	BOLT, FLANGE	1	1				
14	95814–08050	BOLT, FLANGE	3	3				
15	90201–08087	WASHER, PLATE	2	2				
16	95814–08060	BOLT, FLANGE	1	1				
17	90201–08087	WASHER, PLATE	1	1				
18	95817–06070	BOLT, FLANGE	4	4				
19	95817–08065	BOLT, FLANGE	1	1				
20	95814–08070	BOLT, FLANGE	1	1				
21	95817–08075	BOLT, FLANGE	4	4				
22	95817–06025	BOLT, FLANGE	1	1				
23	95814–06040	BOLT, FLANGE	1	1				
24	90201–066F0	WASHER, PLATE	1	1				
25	90465–10028	CLAMP	1	1				
26	3LD–15191–00	PLATE	2	2				
27	90151–06008	SCREW, COUNTERSUNK	2	2				

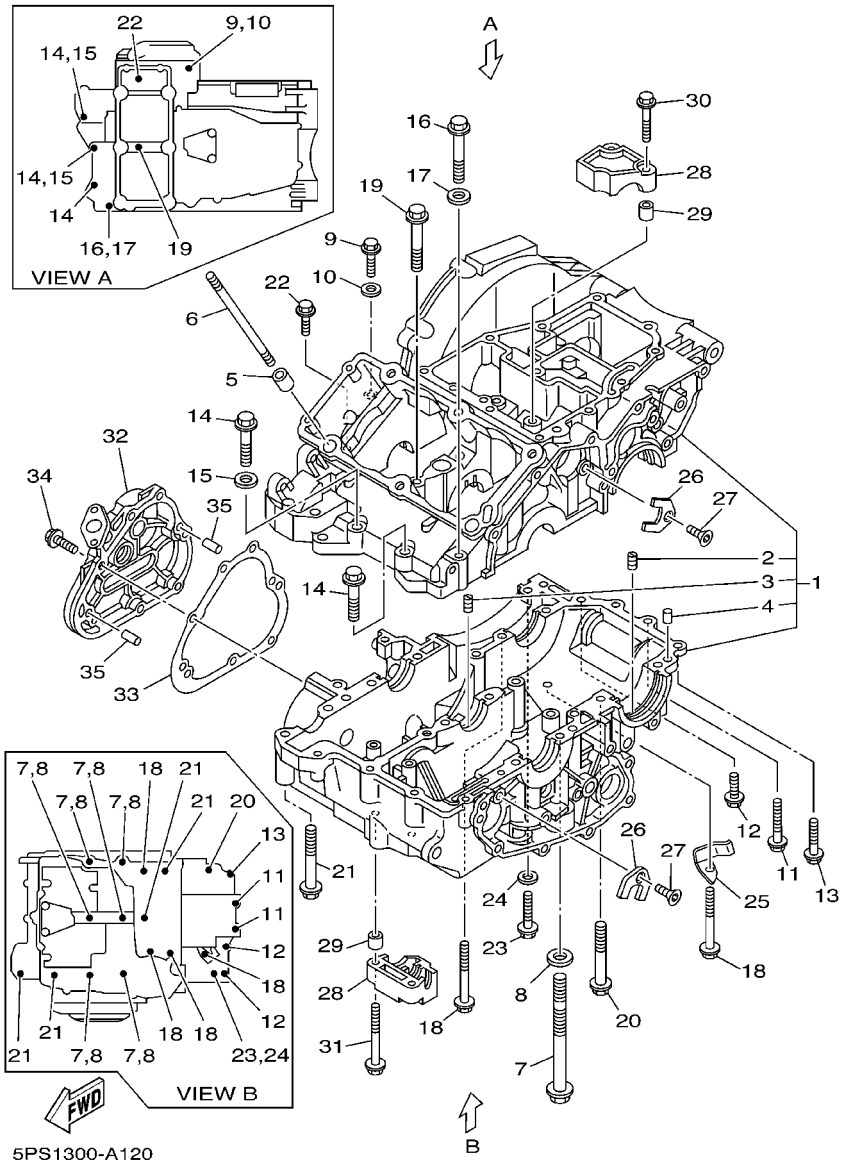

FIG. 12 CRANKCASE

REF. NO.	PART NO.	DESCRIPTION	5PS1	5PS2				REMARKS
28	3LD–15118–00	HOLDER	2	2				
29	99530–08016	PIN, DOWEL	4	4				
30	95817–06045	BOLT, FLANGE	2	2				
31	95817–06070	BOLT, FLANGE	2	2				
32	5PS–15416–00	COVER, OIL PUMP	1	1				
33	5PS–15456–00	GASKET, OIL PUMP COVER 1	1	1				
34	91314–06020	BOLT	7	7				
35	99530–08012	PIN, DOWEL	2	2				

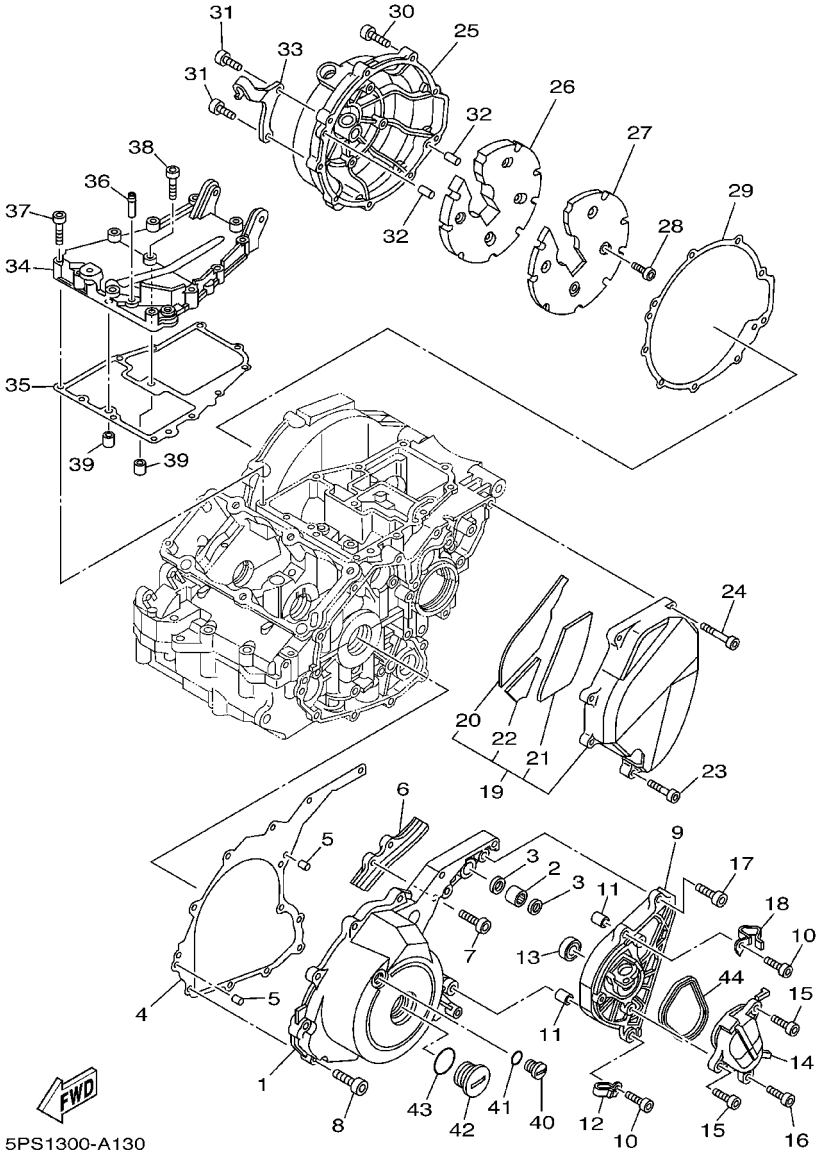

FIG. 13 CRANKCASE COVER 1

REF. NO.	PART NO.	DESCRIPTION	5PS1	5PS2				REMARKS
1	5PS-15411-00	COVER, CRANKCASE 1	1	1				
2	93317-21288	BEARING	1	1				
3	93109-12075	OIL SEAL	2	2				
4	5PS-15451-00	GASKET, CRANKCASE COVER 1	1	1				
5	99530-08012	PIN, DOWEL	2	2				
6	5PS-17653-00	SLIDER	1	1				
7	90109-065A8	BOLT	2	2				
8	91314-06025	BOLT	9	9				
9	5PS-1541E-00	STAY, COVER	1	1				
10	91317-06030	BOLT	2	2				
11	99530-10114	PIN, DOWEL	2	2				
12	90465-08125	CLAMP	1	1				
13	93106-15034	OIL SEAL	1	1				
14	5PS-15419-00	COVER, SHIFTER 1	1	1				
15	91317-06014	BOLT	2	2				
16	91317-06010	BOLT	1	1				
17	91317-06020	BOLT	1	1				
18	90465-08034	CLAMP	1	1				
19	5PS-15420-00	CRANKCASE COVER ASSY 2	1	1				
20	5PS-15326-00	.DAMPER, ENGINE MOUNT 2	1	1				
21	5PS-15335-00	.DAMPER 3	1	1				
22	5PS-15337-00	.DAMPER 4	1	1				
23	91314-06025	BOLT	1	1				
24	91314-06050	BOLT	4	4				
25	5PS-15431-00	COVER, CRANKCASE 3	1	1				
26	5PS-15316-00	DAMPER, ENGINE MOUNT 1	1	1				
27	5PS-15427-00	COVER, CAP 2	1	1				

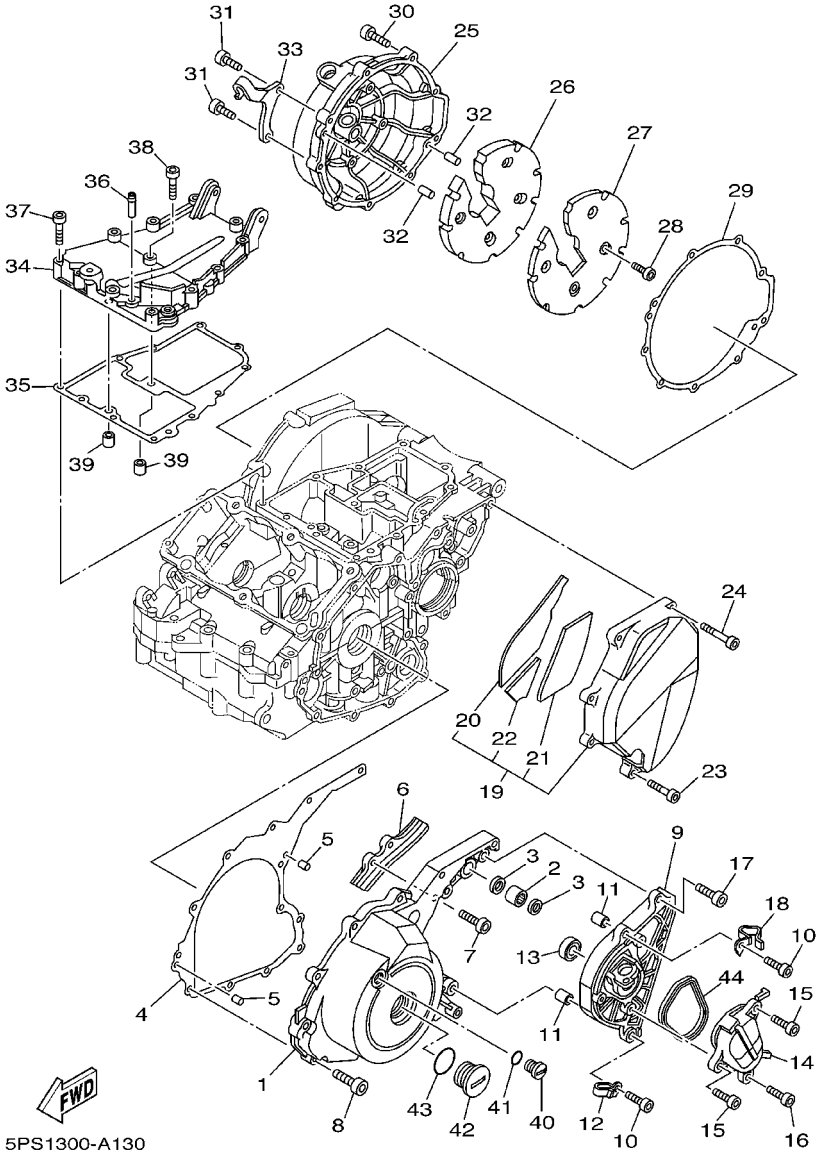

FIG. 13 CRANKCASE COVER 1

REF. NO.	PART NO.	DESCRIPTION	5PS1	5PS2				REMARKS
28	90149–05009	SCREW	4	4				
29	5PS–15462–00	GASKET, CRANKCASE COVER 3	1	1				
30	91314–06025	BOLT	7	7				
31	91314–06030	BOLT	2	2				
32	99530–08012	PIN, DOWEL	2	2				
33	5PS–15441–00	HOLDER, CLUTCH CABLE	1	1				
34	5PS–15425–00	COVER, GENERATOR 2	1	1				
35	5PS–15463–00	GASKET, CARBURETOR COVER 2	1	1				
36	583–11126–00	PIPE, BREATHER 3	1	1				
37	91380–06035	BOLT	11	11				
38	91317–06045	BOLT	1	1				
39	99530–10114	PIN, DOWEL	2	2				
40	90340–14128	PLUG, STRAIGHT SCREW	1	1				
41	93210–14369	O–RING	1	1				
42	90340–32123	PLUG, STRAIGHT SCREW	1	1				
43	93210–32172	O–RING	1	1				
44	5PS–8338L–00	GASKET	1	1				

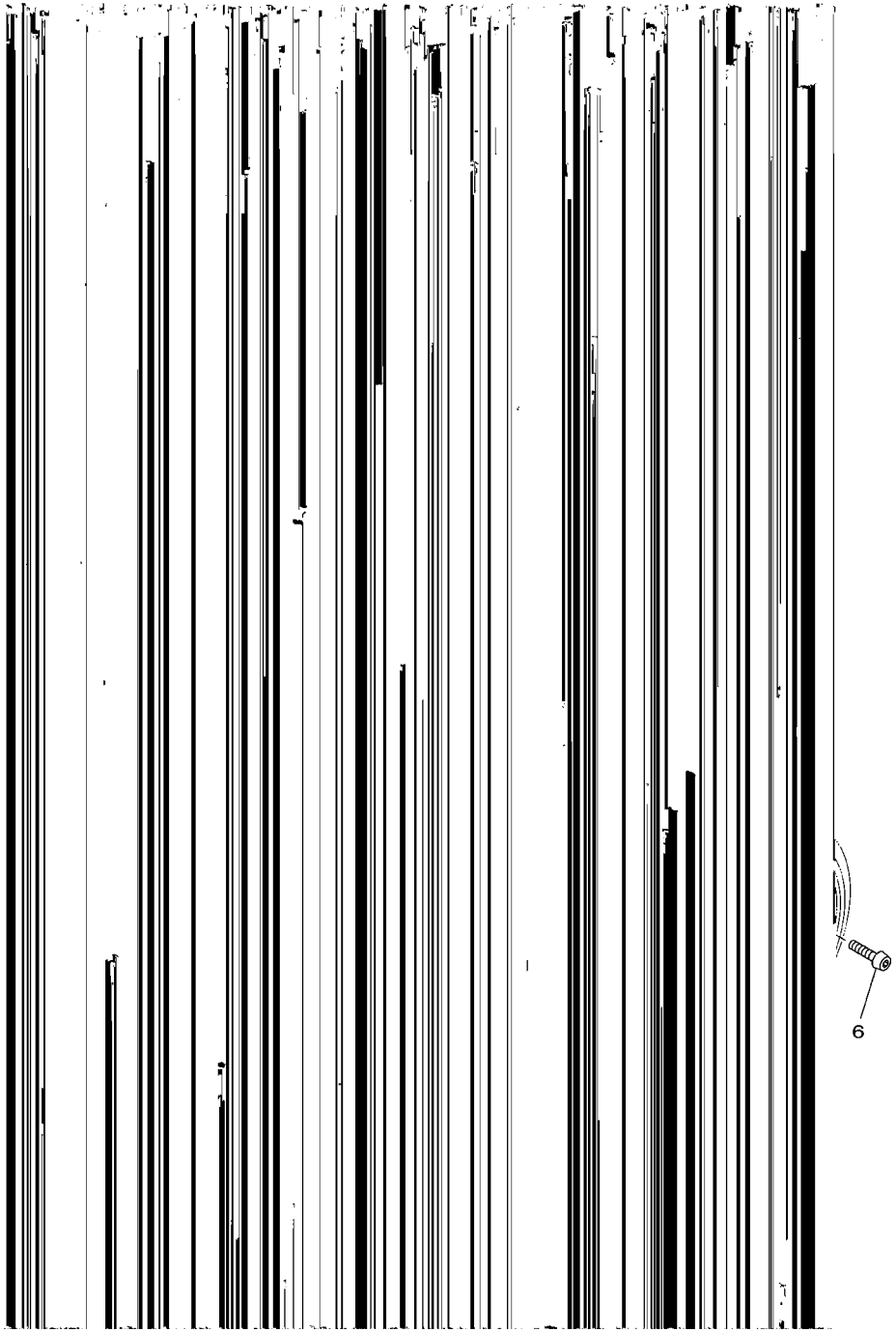

FIG. 14 STARTER CLUTCH

REF. NO.	PART NO.	DESCRIPTION	5PS1	5PS2				REMARKS
1	5PS–15515–00	GEAR 3	1	1				
2	3LD–15517–00	GEAR, IDLER 2	1	1				
3	26H–15521–00	SHAFT 1	1	1				
4	3LD–15512–00	GEAR, IDLER 1	1	1				
5	3LD–15590–02	STARTER ONE–WAY ASSY	1	1				
6	90149–06026	SCREW	3	3				
7	90201–30008	WASHER, PLATE	1	1				

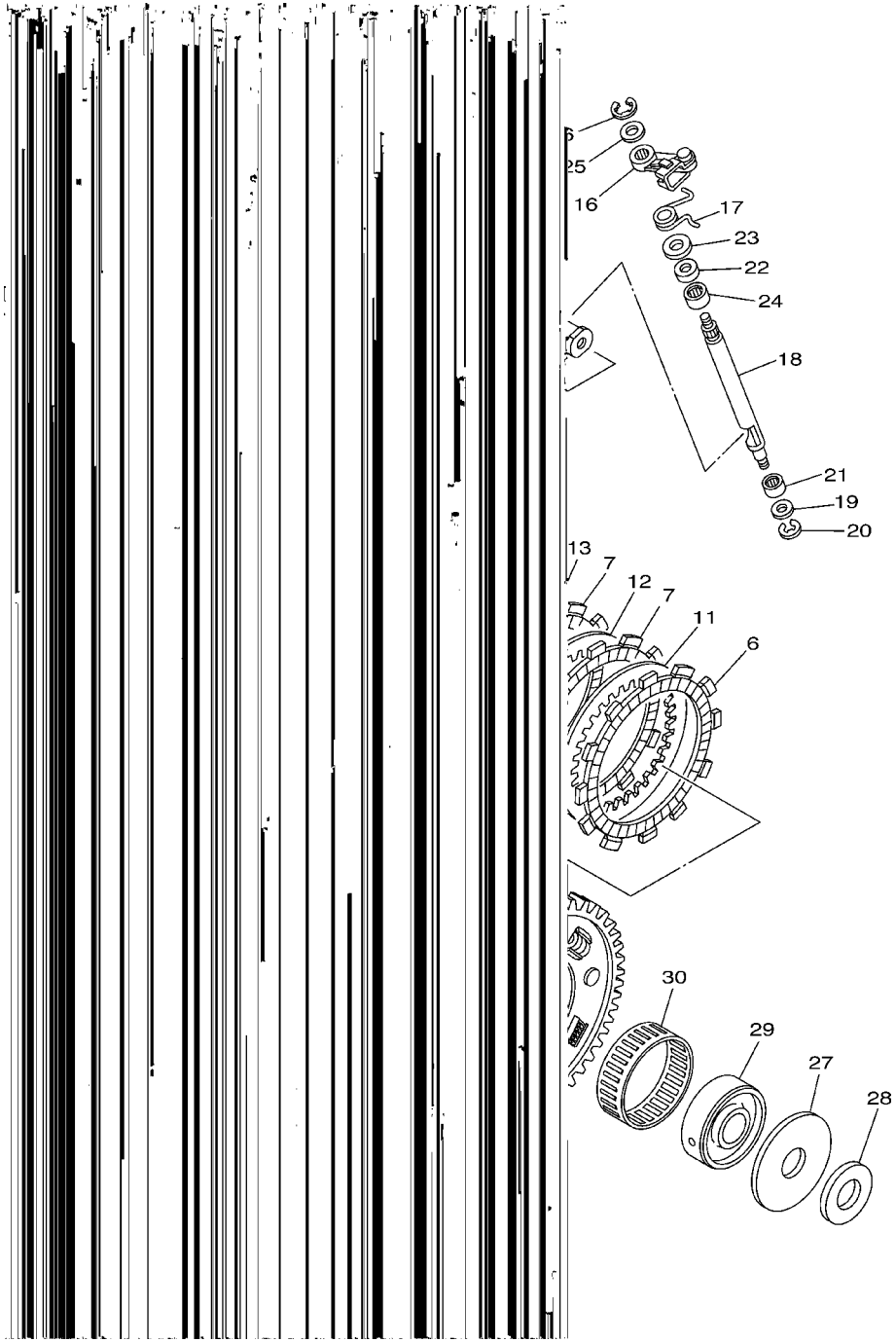

FIG. 15 CLUTCH

REF. NO.	PART NO.	DESCRIPTION	5PS1	5PS2				REMARKS
1	4TX-16150-02	PRIMARY DRIVEN GEAR COMP.	1	1				
2	5PS-16356-00	ROD, PUSH 1	1	1				
3	93306-00304	BEARING (B6003C4)	1	1				
4	4H7-16154-00	PLATE, THRUST 1	1	1				
5	4TX-16371-00	BOSS, CLUTCH	1	1				
6	4H7-16321-02	PLATE, FRICTION	2	2				
7	4TX-16321-00	PLATE, FRICTION	7	7				
8	5EB-16351-01	PLATE, PRESSURE 1	1	1				
9	90501-230E4	SPRING, COMPRESSION	6	6				
10	90159-06123	SCREW, WITH WASHER	6	6				
11	3J2-16324-00	PLATE, CLUTCH 1 (T=2.0)	1	1				UR
	168-16325-00	PLATE, CLUTCH 2 (T=1.6)	1	1				UR
	168-16324-00	PLATE, CLUTCH 1 (T=2.3)	1	1				UR
12	3J2-16324-00	PLATE, CLUTCH 1 (T=2.0)	1	1				UR
	168-16324-00	PLATE, CLUTCH 1 (T=2.3)	1	1				UR
13	3J2-16324-00	PLATE, CLUTCH 1 (T=2.0)	6	6				
14	90215-20004	WASHER, LOCK	1	1				
15	90170-20008	NUT	1	1				
16	5PS-16340-00	PUSH LEVER ASSY	1	1				
17	90508-14012	SPRING, TORSION	1	1				
18	5PS-16382-00	AXLE, PUSH LEVER	1	1				
19	92907-08600	WASHER, PLATE	1	1				
20	99001-07600	CIRCLIP	1	1				
21	93317-11020	BEARING	1	1				
22	93102-12106	OIL SEAL (SD 12-22-5 HS)	1	1				
23	90201-12163	WASHER, PLATE	1	1				
24	93317-11287	BEARING	1	1				

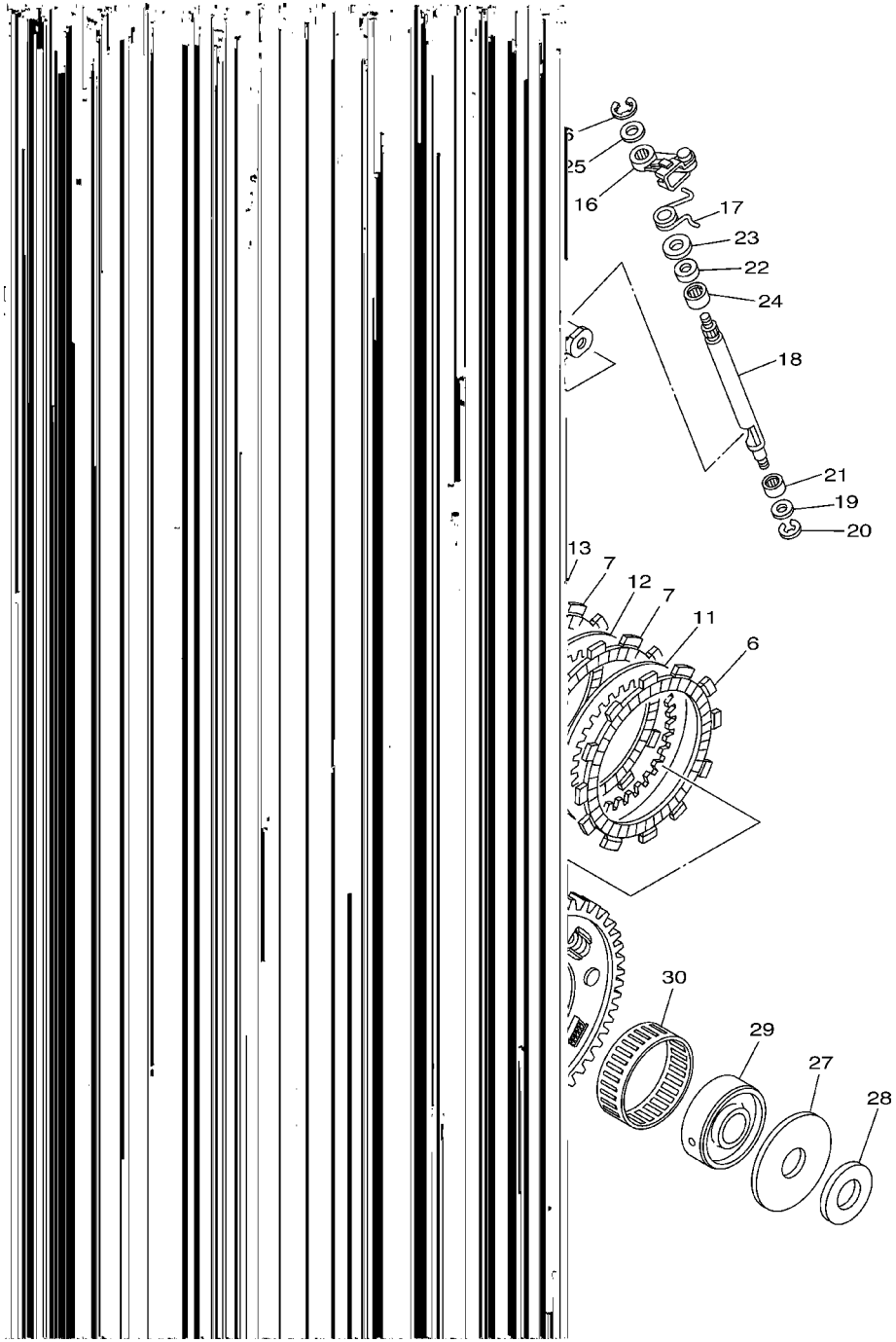

FIG. 15 CLUTCH

REF. NO.	PART NO.	DESCRIPTION	5PS1	5PS2				REMARKS
25	90201–10119	WASHER, PLATE	1	1				
26	99009–10400	CIRCLIP	1	1				
27	3VD–16164–00	PLATE, THRUST 2	1	1				
28	3VD–16154–00	PLATE, THRUST 1	1	1				
29	4NX–16181–00	SPACER 1	1	1				
30	93310–365B8	BEARING	1	1				

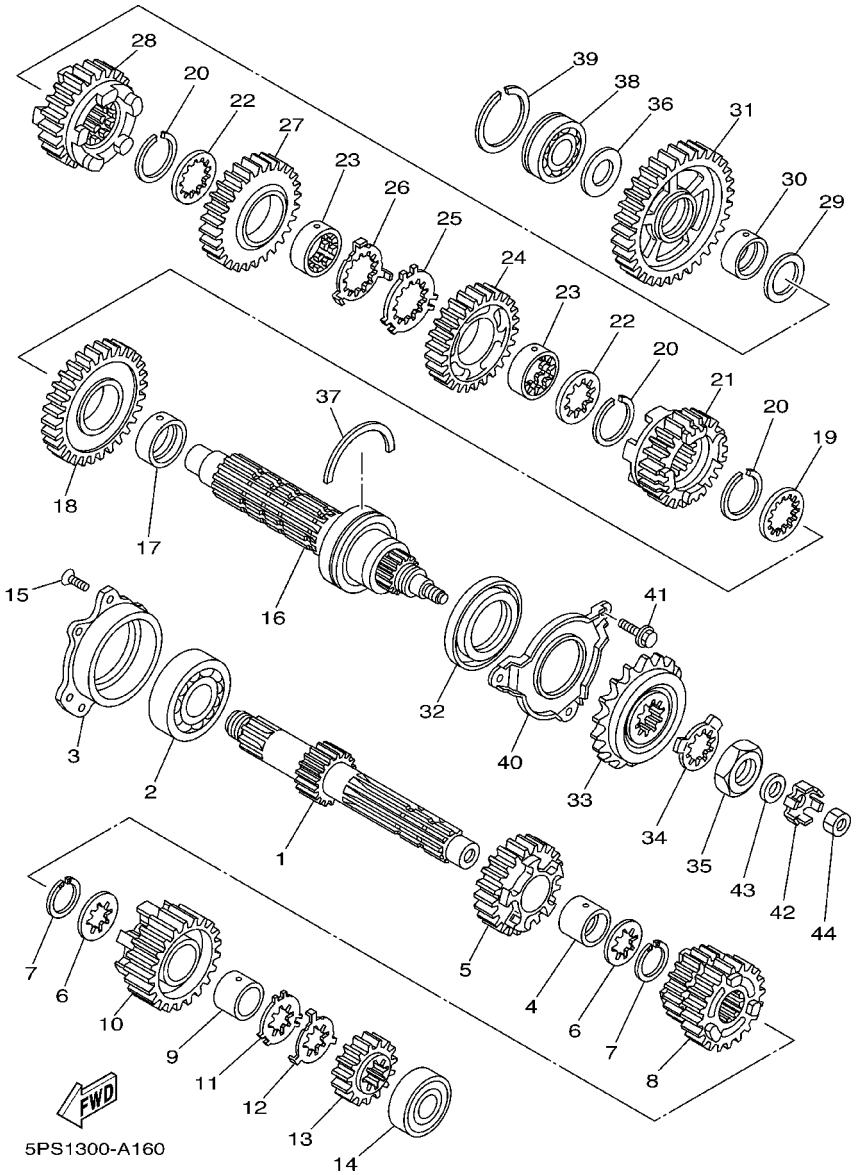

FIG. 16 TRANSMISSION

REF. NO.	PART NO.	DESCRIPTION	5PS1	5PS2				REMARKS
1	5PS-17401-00	MAIN AXLE ASSY	1	1				
2	93306-30534	BEARING	1	1				
3	5PS-15163-00	HOUSING, BEARING 1	1	1				
4	90387-25004	COLLAR	1	1				
5	5PS-17151-00	GEAR, 5TH PINION (25T)	1	1				
6	90209-21332	WASHER	2	2				
7	93440-25084	CIRCLIP	2	2				
8	5PS-17131-00	GEAR, 3RD/4TH PINION (22T/25T)	1	1				
9	90387-2513E	COLLAR	1	1				
10	5PS-17161-00	GEAR, 6TH PINION (26T)	1	1				
11	90209-22352	WASHER	1	1				
12	90209-21351	WASHER	1	1				
13	5PS-17121-00	GEAR, 2ND PINION (13T)	1	1				
14	93306-20464	BEARING	1	1				
15	90151-06011	SCREW, COUNTERSUNK	3	3				
16	5PS-17402-00	DRIVE AXLE ASSY	1	1				
17	90387-32003	COLLAR	1	1				
18	5PS-17221-00	GEAR, 2ND WHEEL (37T)	1	1				
19	90209-28331	WASHER	1	1				
20	93440-31183	CIRCLIP	3	3				
21	5PS-17261-00	GEAR, 6TH WHEEL (24T)	1	1				
22	90209-28331	WASHER	2	2				
23	90387-2802W	COLLAR	2	2				
24	5PS-17241-00	GEAR, 4TH WHEEL (31T)	1	1				
25	90209-29329	WASHER	1	1				
26	90209-28330	WASHER	1	1				
27	5PS-17231-00	GEAR, 3RD WHEEL(34T)	1	1				

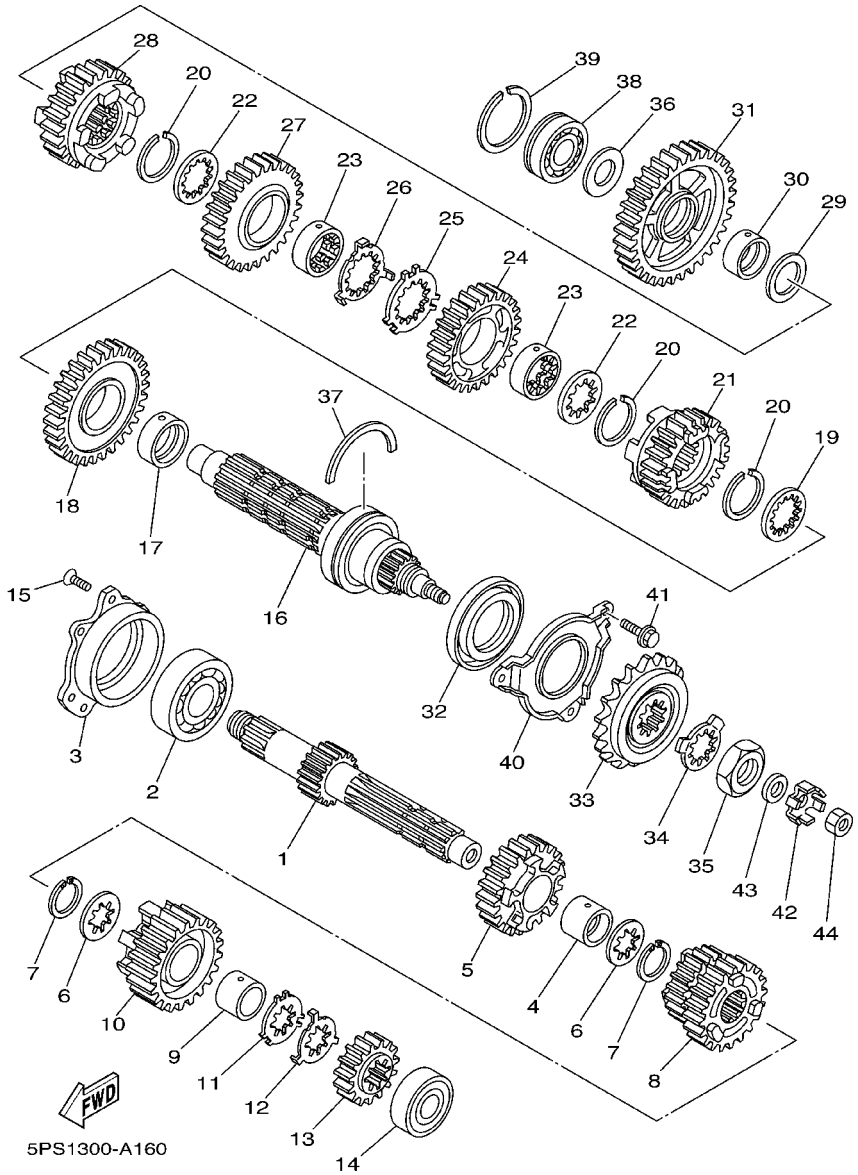

FIG. 16 TRANSMISSION

REF. NO.	PART NO.	DESCRIPTION	5PS1	5PS2				REMARKS
28	5PS–17251–00	GEAR, 5TH WHEEL (26T)	1	1				
29	90201–25M72	WASHER, PLATE	1	1				
30	90387–2511A	COLLAR	1	1				
31	5PS–17211–00	GEAR, 1ST WHEEL (33T)	1	1				
32	93102–40008	OIL SEAL	1	1				
33	5PS–17460–00	SPROCKET, DRIVE (13T)	1	1				
34	90215–30233	WASHER, LOCK	1	1				
35	90179–22003	NUT	1	1				
36	90201–20008	WASHER, PLATE	1	1				
37	278–17424–01	CIRCLIP 1	1	1				
38	93306–20455	BEARING	1	1				
39	93440–45144	CIRCLIP	1	1				
40	5PS–17471–00	PLATE, COVER	1	1				
41	95827–06012	BOLT, FLANGE	3	3				
42	5PS–17446–00	PLATE	1	1				
43	90201–10N12	WASHER, PLATE	1	1				
44	95307–10700	NUT	1	1				

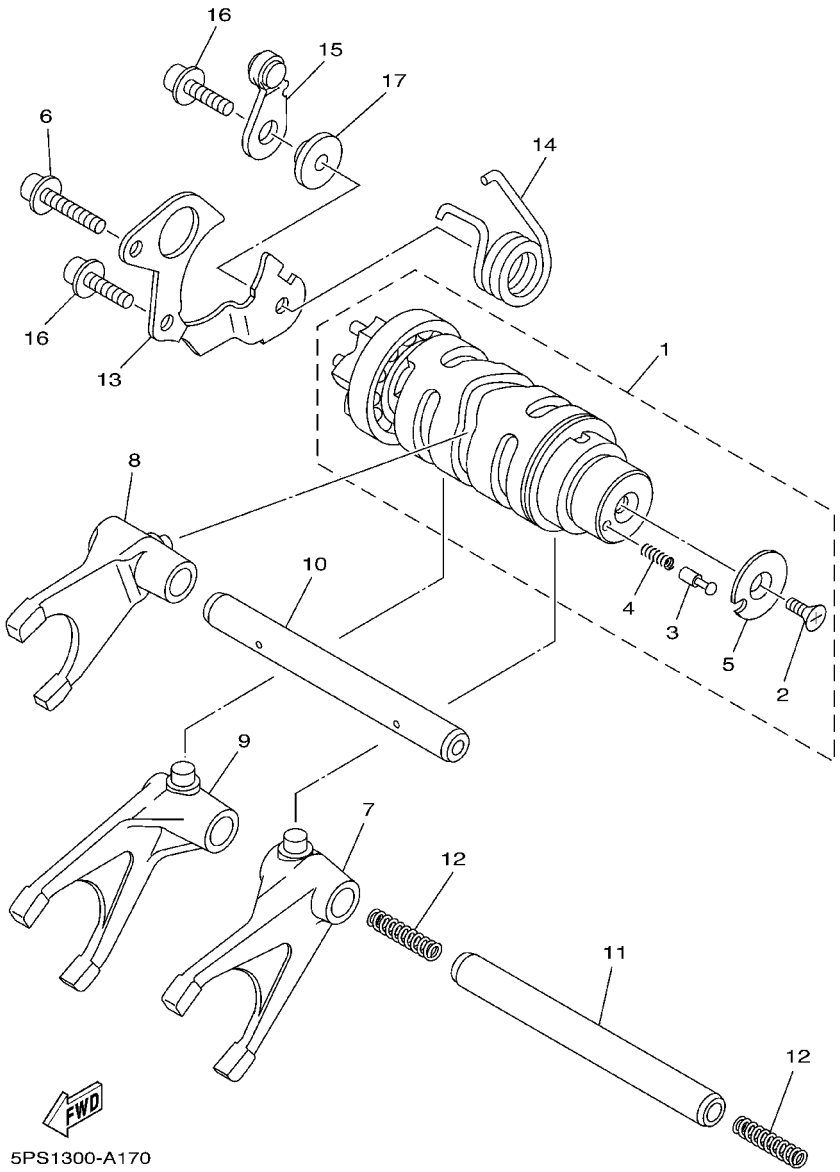

FIG. 17 SHIFT CAM. FORK

REF. NO.	PART NO.	DESCRIPTION	5PS1	5PS2				REMARKS
1	5PS-18540-00	SHIFT CAM ASSY	1	1				
2	90149-05321	.SCREW	1	1				
3	4UN-18542-00	.POINT, NEUTRAL	1	1				
4	90501-06022	.SPRING, COMPRESSION	1	1				
5	4UN-18566-00	.PLATE, SIDE 2	1	1				
6	90110-06060	BOLT, HEXAGON SOCKET HEAD	1	1				
7	5PS-18511-00	FORK, SHIFT 1	1	1				
8	5PS-18512-00	FORK, SHIFT 2	1	1				
9	5PS-18513-00	FORK, SHIFT 3	1	1				
10	5PS-18531-00	BAR, SHIFT FORK GUIDE 1	1	1				
11	4XV-18531-00	BAR, SHIFT FORK GUIDE 1	1	1				
12	90501-064L1	SPRING, COMPRESSION	2	2				
13	3LD-18536-00	STOPPER, SHIFT BAR	1	1				
14	90508-29016	SPRING, TORSION	1	1				
15	4SV-18140-00	STOPPER LEVER ASSY	1	1				
16	90110-06027	BOLT, HEXAGON SOCKET HEAD	2	2				
17	4NX-18175-00	SPACER	1	1				

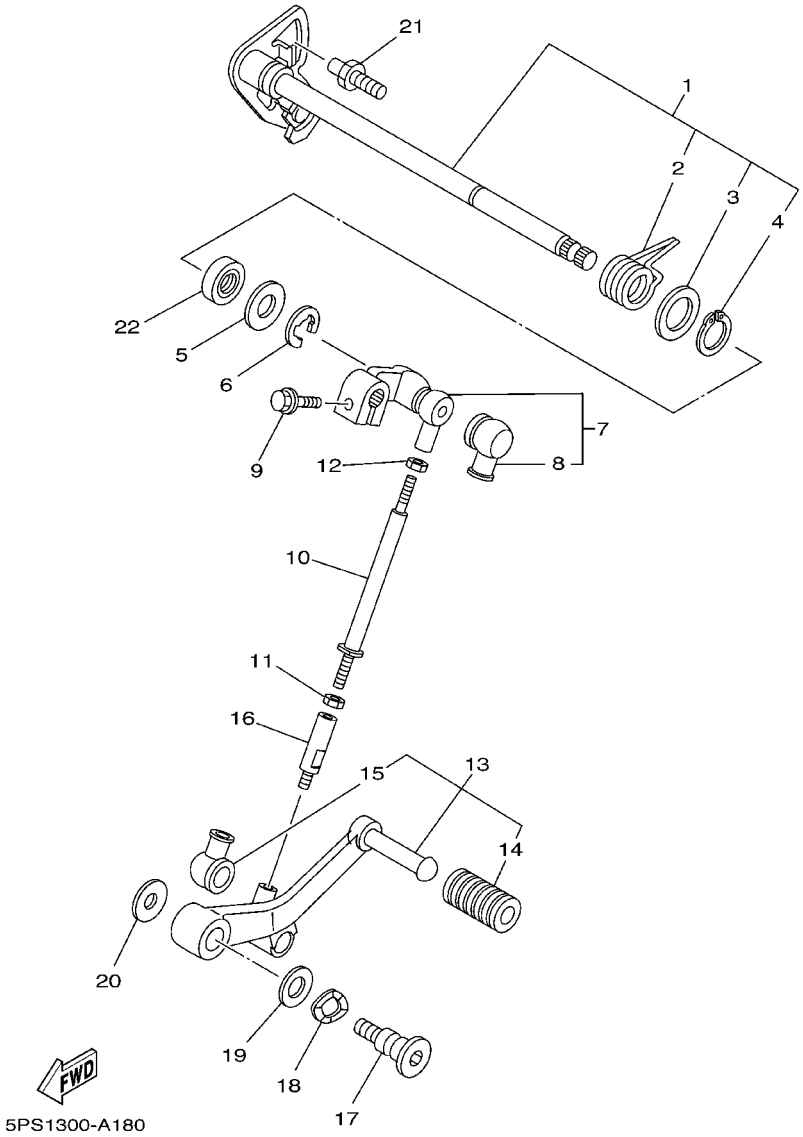

FIG. 18 SHIFT SHAFT

REF. NO.	PART NO.	DESCRIPTION	5PS1	5PS2				REMARKS
1	5PS-18101-00	SHIFT SHAFT ASSY	1	1				
2	90508-32682	.SPRING, TORSION	1	1				
3	90201-191J4	.WASHER, PLATE	1	1				
4	99009-19400	.CIRCLIP	1	1				
5	90201-12575	WASHER, PLATE	1	1				
6	99001-10600	CIRCLIP	1	1				
7	5PS-18130-00	SHIFT SHAFT ASSY	1	1				
8	2H9-18154-00	.COVER, DUST	1	1				
9	95827-06020	BOLT, FLANGE	1	1				
10	2H9-18115-00	ROD, SHIFT	1	1				
11	90170-06228	NUT (COUNTER CLOCKWISE)	1	1				
12	95304-06700	NUT	1	1				
13	5PS-18110-00	SHIFT PEDAL ASSY	1	1				
14	5EB-18113-00	.COVER, SHIFT PEDAL	1	1				
15	2H9-18154-00	.COVER, DUST	1	1				
16	5PS-18116-00	JOINT, ROD 1	1	1				
17	5JW-27434-00	BOLT	1	1				
18	90206-12074	WASHER, WAVE	1	1				
19	90201-12013	WASHER, PLATE	1	1				
20	90201-080H1	WASHER, PLATE	1	1				
21	4XV-18127-00	STOPPER, SCREW	1	1				
22	93101-12004	OIL SEAL	1	1				

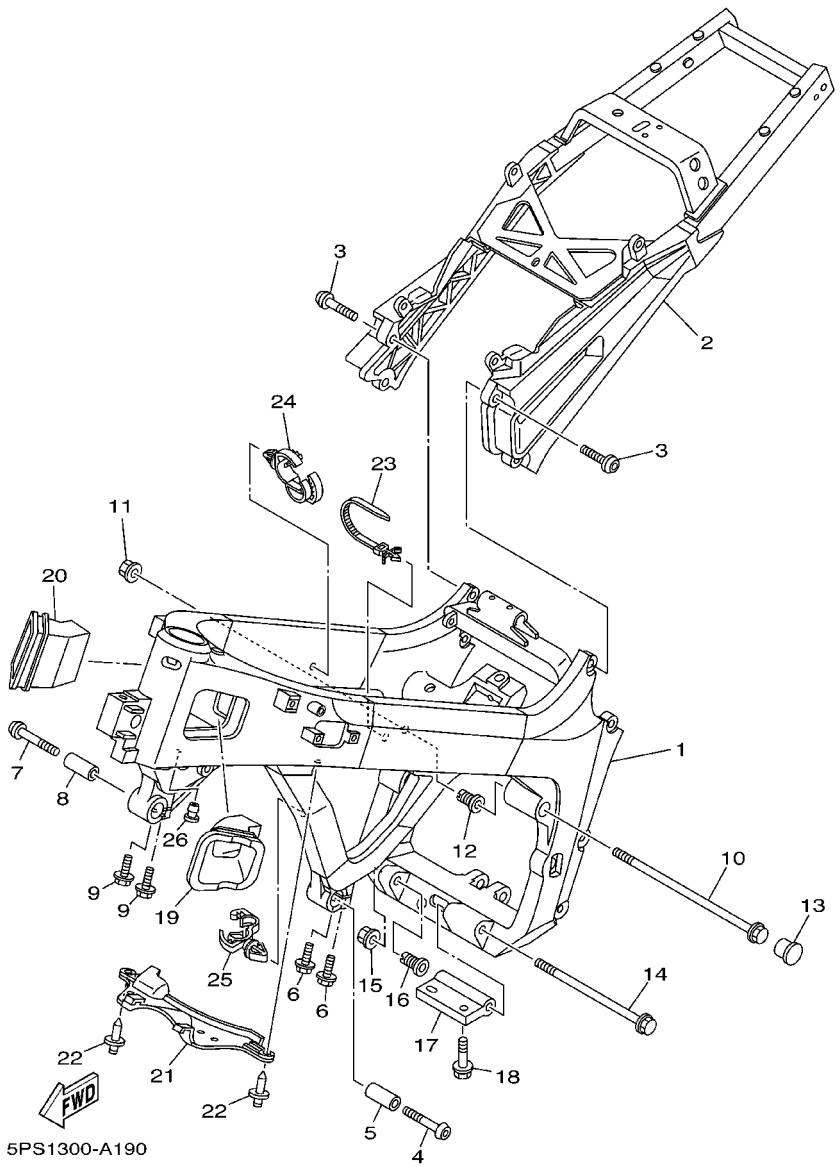

FIG. 19 FRAME

REF. NO.	PART NO.	DESCRIPTION	5PS1	5PS2				REMARKS
1	5PS–21110–00	FRAME COMP.	1					
	5PS–21110–10	FRAME COMP.		1				
2	5PS–21190–00	REAR FRAME COMP.	1	1				
3	90149–10002	SCREW	4	4				
4	90111–12001	BOLT	1	1				
5	90387–14003	COLLAR	1	1				
6	90105–08047	BOLT, FLANGE	2	2				
7	90111–12001	BOLT	1	1				
8	90387–14003	COLLAR	1	1				
9	90105–08047	BOLT, FLANGE	2	2				
10	90105–10032	BOLT, FLANGE	1	1				
11	90179–10002	NUT	1	1				
12	5EB–21495–00	BOLT, ENGINE ADJUSTING	1	1				
13	90338–24112	PLUG	1	1				
14	90105–10113	BOLT, FLANGE	1	1				
15	90179–10696	NUT	1	1				
16	5EB–21495–00	BOLT, ENGINE ADJUSTING	1	1				
17	5PS–21489–00	BRACKET, ENGINE LOWER	1	1				
18	95817–08030	BOLT, FLANGE	2	2				
19	5PS–2117V–00	COVER 7	1	1				
20	5PS–2117W–00	COVER 8	1	1				
21	5PS–2117M–00	COVER 2	1	1				
22	90269–07001	RIVET	2	2				
23	90464–12089	CLAMP	1	1				
24	90464–20181	CLAMP	1	1				
25	90464–13249	CLAMP	1	1				
26	90338–08008	PLUG	1	1				

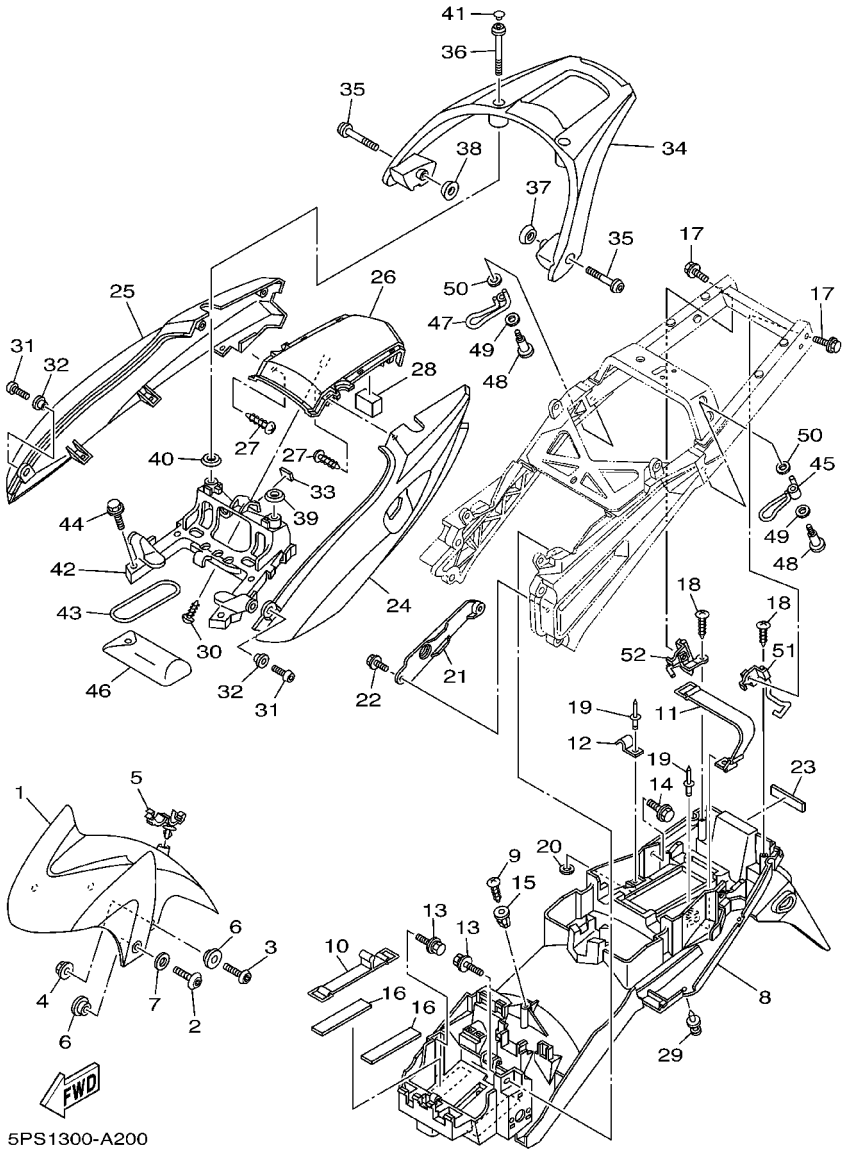

5PS1300-A200

FIG. 20 FENDER

REF. NO.	PART NO.	DESCRIPTION	5PS1	5PS2				REMARKS
1	5PS-21511-00-P0	FENDER, FRONT	1	1				UR VDBMA
	5PS-21511-00-P1	FENDER, FRONT	1	1				UR S3
	5PS-21511-00-P2	FENDER, FRONT	1	1				UR RYC1
2	90110-06200	BOLT, HEXAGON SOCKET HEAD	2	2				
3	92014-06020	BOLT, BUTTON HEAD	2	2				
4	90179-06009	NUT	2	2				
5	90464-18002	CLAMP	1	1				
6	90387-065T2	COLLAR	4	4				
7	90202-06170	WASHER, PLATE	2	2				
8	5PS-21611-00	FENDER, REAR	1	1				
9	97707-60020	SCREW, TAPPING	1	1				
10	3VD-82131-00	BAND, BATTERY	1	1				
11	5JW-21647-01	BAND	1	1				
12	5PS-2162A-00	HOOK	1	1				
13	90119-06108	BOLT, WITH WASHER	2	2				
14	90119-06118	BOLT, WITH WASHER	2	2				
15	90338-08226	PLUG	1	1				
16	1AE-2834E-00	DAMPER	2	2				
17	90105-06020	BOLT, FLANGE	2	2				
18	97707-50020	SCREW, TAPPING	2	2				
19	90267-40110	RIVET, BLIND	2	2				
20	90201-04018	WASHER, PLATE	1	1				
21	5PS-2163A-00	COVER, REAR FENDER 1	1	1				
22	90119-05062	BOLT, WITH WASHER	2	2				
23	5PS-21639-00	DAMPER 2	1	1				
24	5PS-2471K-00-4B	COVER, TAIL 1	1	1				UR BL2 FOR VDBMA
	5PS-2471K-00-P0	COVER, TAIL 1	1	1				UR BS4 FOR S3

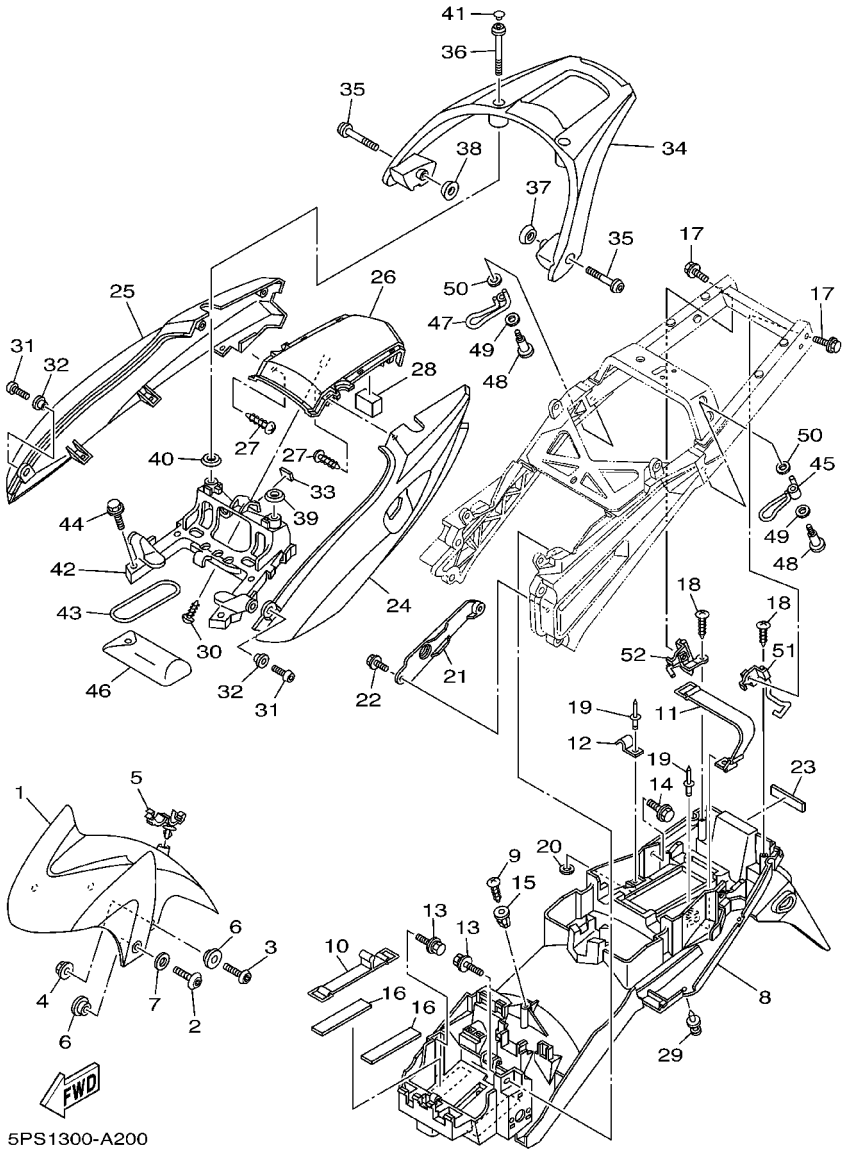

5PS1300-A200

FIG. 20 FENDER

REF. NO.	PART NO.	DESCRIPTION	5PS1	5PS2				REMARKS
24	5PS-2471K-00-P1	COVER, TAIL 1	1	1				UR S3 FOR RYC1
25	5PS-2472K-00-4B	COVER, TAIL 2	1	1				UR BL2 FOR VDBMA
	5PS-2472K-00-P0	COVER, TAIL 2	1	1				UR BS4 FOR S3
	5PS-2472K-00-P1	COVER, TAIL 2	1	1				UR S3 FOR RYC1
26	5PS-21651-00-4B	COVER, REAR FENDER	1	1				UR BL2 FOR VDBMA
	5PS-21651-00-P0	COVER, REAR FENDER	1	1				UR BS4 FOR S3
	5PS-21651-00-P1	COVER, REAR FENDER	1	1				UR S3 FOR RYC1
27	97707-50012	SCREW, TAPPING	4	4				
28	5PS-21649-00	DAMPER	1	1				
29	90269-06081	RIVET	6	6				
30	97707-50014	SCREW, TAPPING	1	1				
31	92017-06014	BOLT, BUTTON HEAD	2	2				
32	90387-06048	COLLAR	2	2				
33	51Y-21639-00	DAMPER 2	1	1				
34	5PS-24773-00	HANDLE, SEAT	1	1				
35	90111-08005	BOLT	2	2				
36	90111-08006	BOLT	2	2				
37	5PS-24723-00	DAMPER, SEAT	1	1				
38	5PS-24724-00	DAMPER, SEAT	1	1				
39	5PS-24723-10	DAMPER, SEAT	1	1				
40	5PS-24724-10	DAMPER, SEAT	1	1				
41	90338-08163	PLUG	2	2				
42	5PS-2117E-00	BRACKET, TAILLIGHT	1	1				
43	4XV-21376-00	BAND, TOOL	1	1				
44	95827-08035	BOLT, FLANGE	4	4				
45	5PS-21654-00	WIRE	1	1				
46	5PS-28100-00	TOOL KIT	1	1				

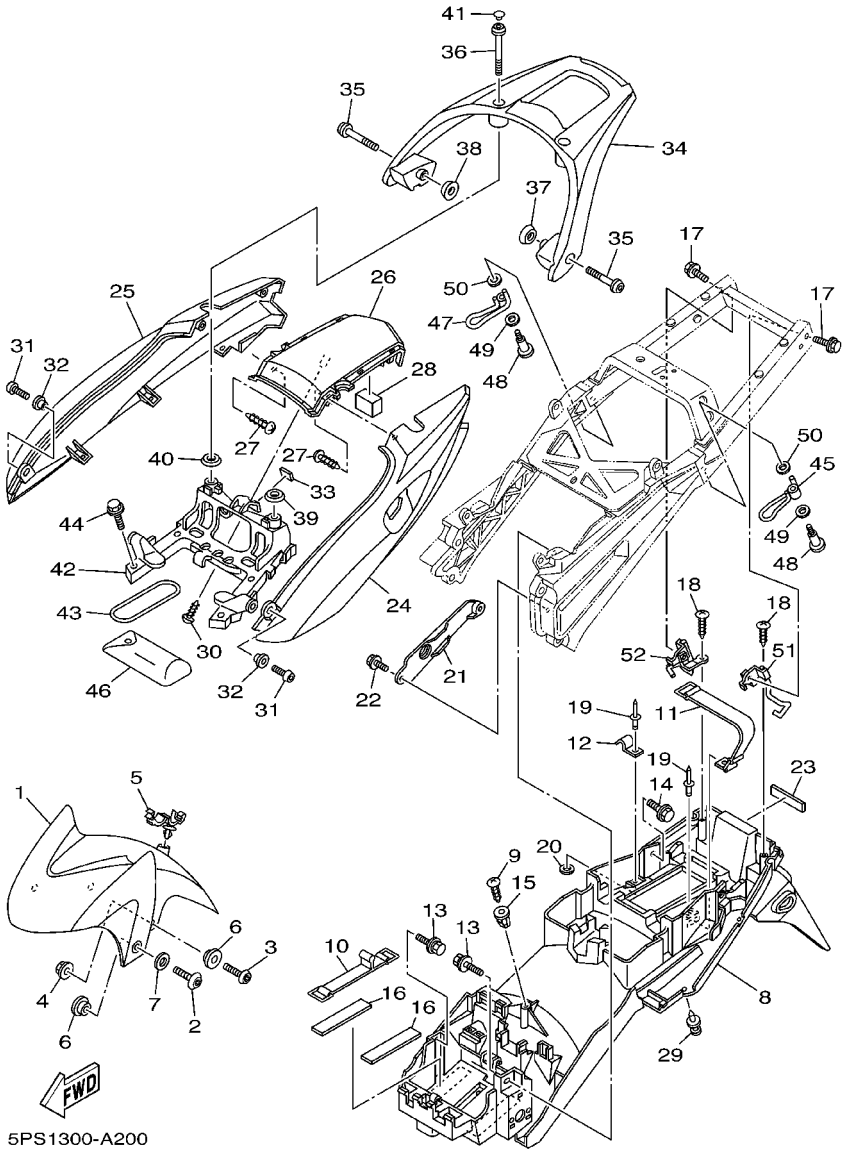

5PS1300-A200

FIG. 20 FENDER

REF. NO.	PART NO.	DESCRIPTION	5PS1	5PS2				REMARKS
47	5PS-21654-10	WIRE	1	1				
48	90109-06046	BOLT	2	2				
49	90206-08051	WASHER, WAVE	2	2				
50	90201-06043	WASHER, PLATE	2	2				
51	5PS-2132F-00	HOOK	1	1				
52	5PS-2139E-00	HOOK 2	1	1				

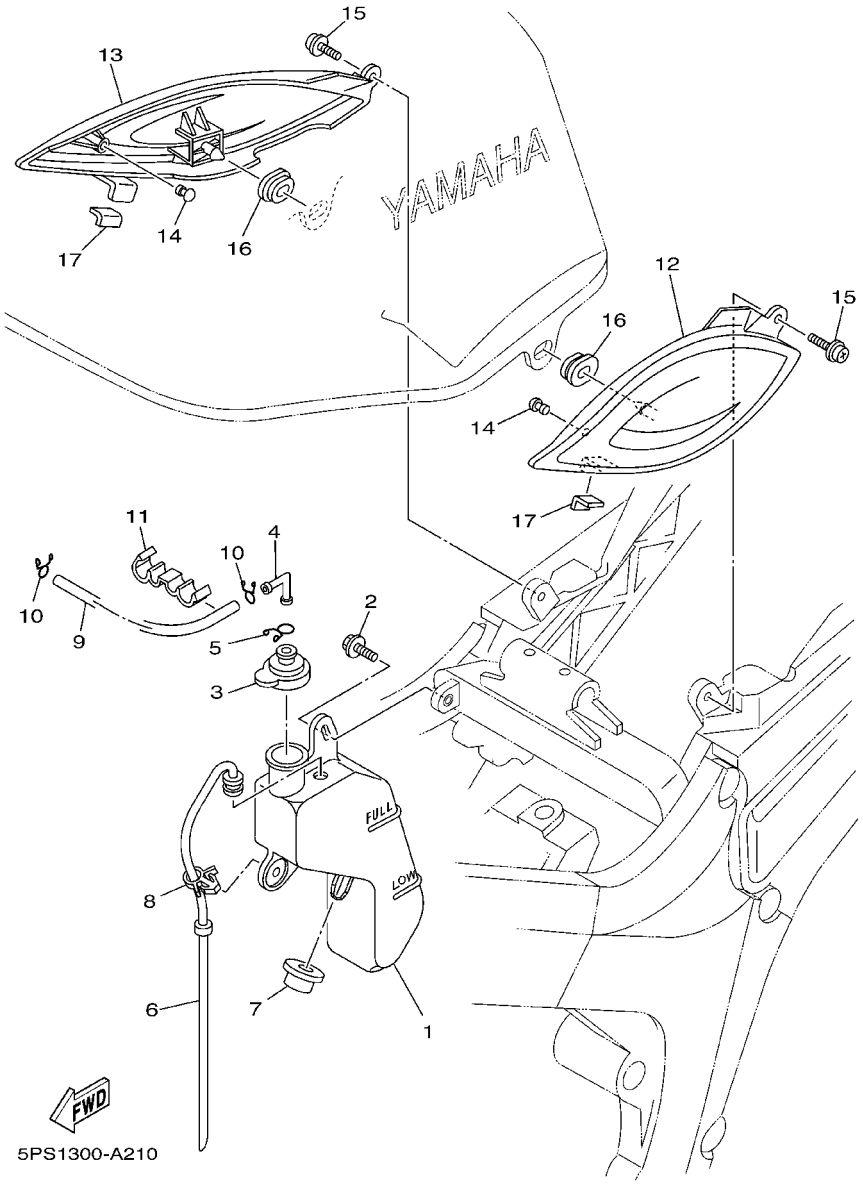

FIG. 21 SIDE COVER

REF. NO.	PART NO.	DESCRIPTION	5PS1	5PS2				REMARKS
1	5PS-21871-00	TANK, RECOVERY	1	1				
2	90119-06117	BOLT, WITH WASHER	1	1				
3	5EB-21875-00	CAP	1	1				
4	26H-21828-00	ELBOW	1	1				
5	90467-11019	CLIP	1	1				
6	5PS-21816-00	PIPE 1	1	1				
7	90480-20566	GROMMET	1	1				
8	90464-15157	CLAMP	1	1				
9	90445-083J5	HOSE (L600)	1	1				
10	90467-08075	CLIP	2	2				
11	90464-10233	CLAMP	2	2				
12	5PS-21711-00	COVER, SIDE 1	1	1				
13	5PS-21721-00	COVER, SIDE 2	1	1				
14	1J7-21717-00	DAMPER	2	2				
15	90159-06033	SCREW, WITH WASHER	2	2				
16	90480-01558	GROMMET	2	2				
17	3TB-28217-00	DAMPER 1	2	2				

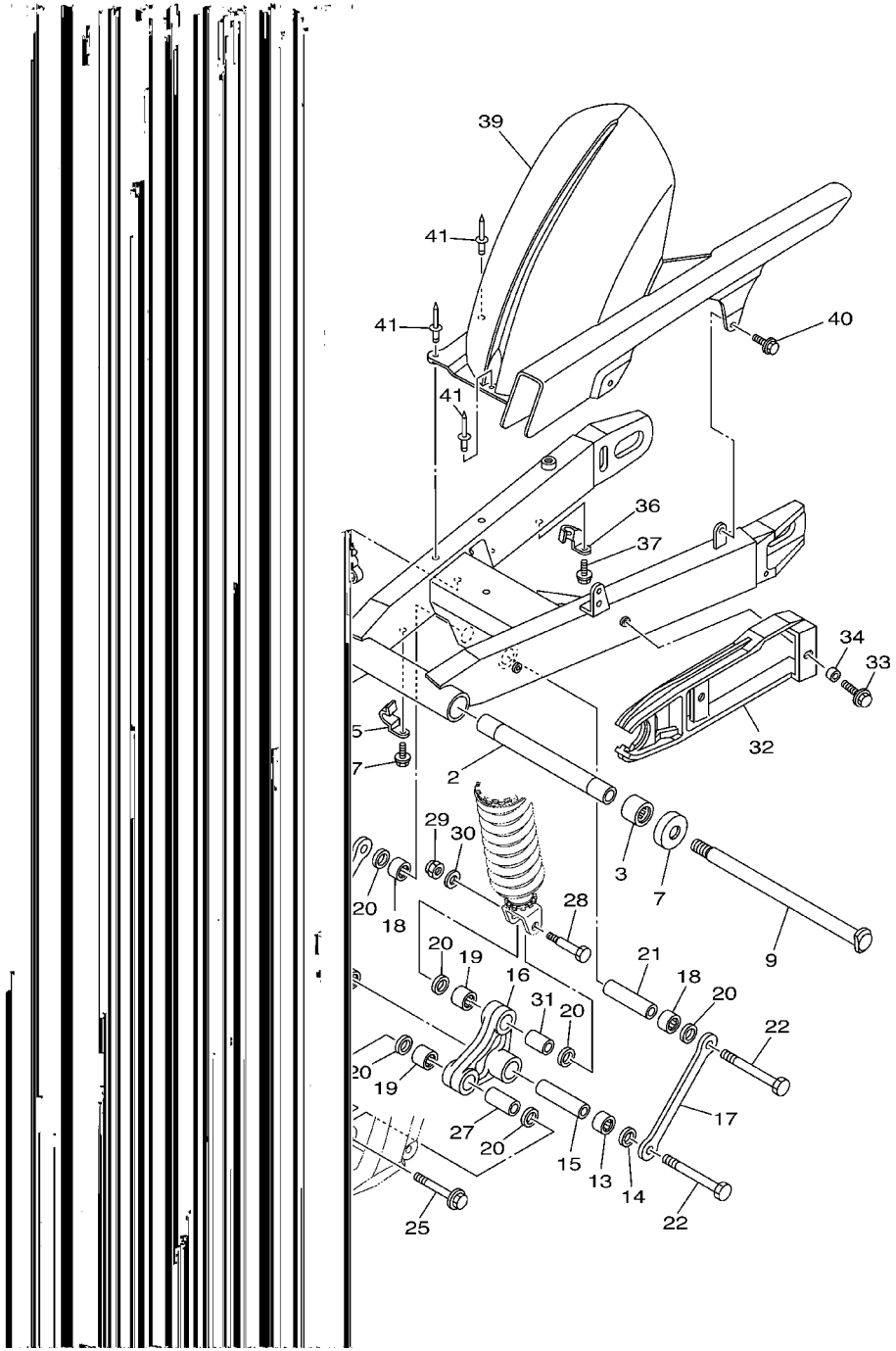

FIG. 22 REAR ARM

REF. NO.	PART NO.	DESCRIPTION	5PS1	5PS2				REMARKS
1	5PS–22110–00	REAR ARM COMP.	1	1				
2	5PS–22184–00	BUSH	1	1				
3	93315–42523	BEARING	1	1				
4	93315–42536	BEARING	1	1				
5	5EB–22127–00	SHIM	1	1				
6	5EB–22123–00	BUSH 1	1	1				
7	3FV–22128–00	COVER, THRUST 1	1	1				
8	93109–33049	OIL SEAL	1	1				
9	5PS–22141–00	SHAFT, PIVOT	1	1				
10	90185–18167	NUT, SELF–LOCKING	1	1				
11	90201–186M4	WASHER, PLATE	1	1				
12	5PS–22125–00	BOLT	1	1				
13	93317–21746	BEARING	2	2				
14	93109–17071	OIL SEAL	2	2				
15	90387–126Y1	COLLAR	1	1				
16	5PS–2217A–00	ARM, RELAY	1	1				
17	5PS–2217M–00	ARM 1	2	2				
18	93317–21746	BEARING	2	2				
19	93317–31771	BEARING	2	2				
20	93109–17071	OIL SEAL	6	6				
21	90387–126Y1	COLLAR	1	1				
22	90101–12749	BOLT	2	2				
23	90185–12119	NUT, SELF–LOCKING	2	2				
24	92907–12600	WASHER	2	2				
25	90105–10323	BOLT, FLANGE	1	1				
26	95607–10200	NUT, SELF–LOCKING	1	1				
27	90387–1012B	COLLAR	1	1				

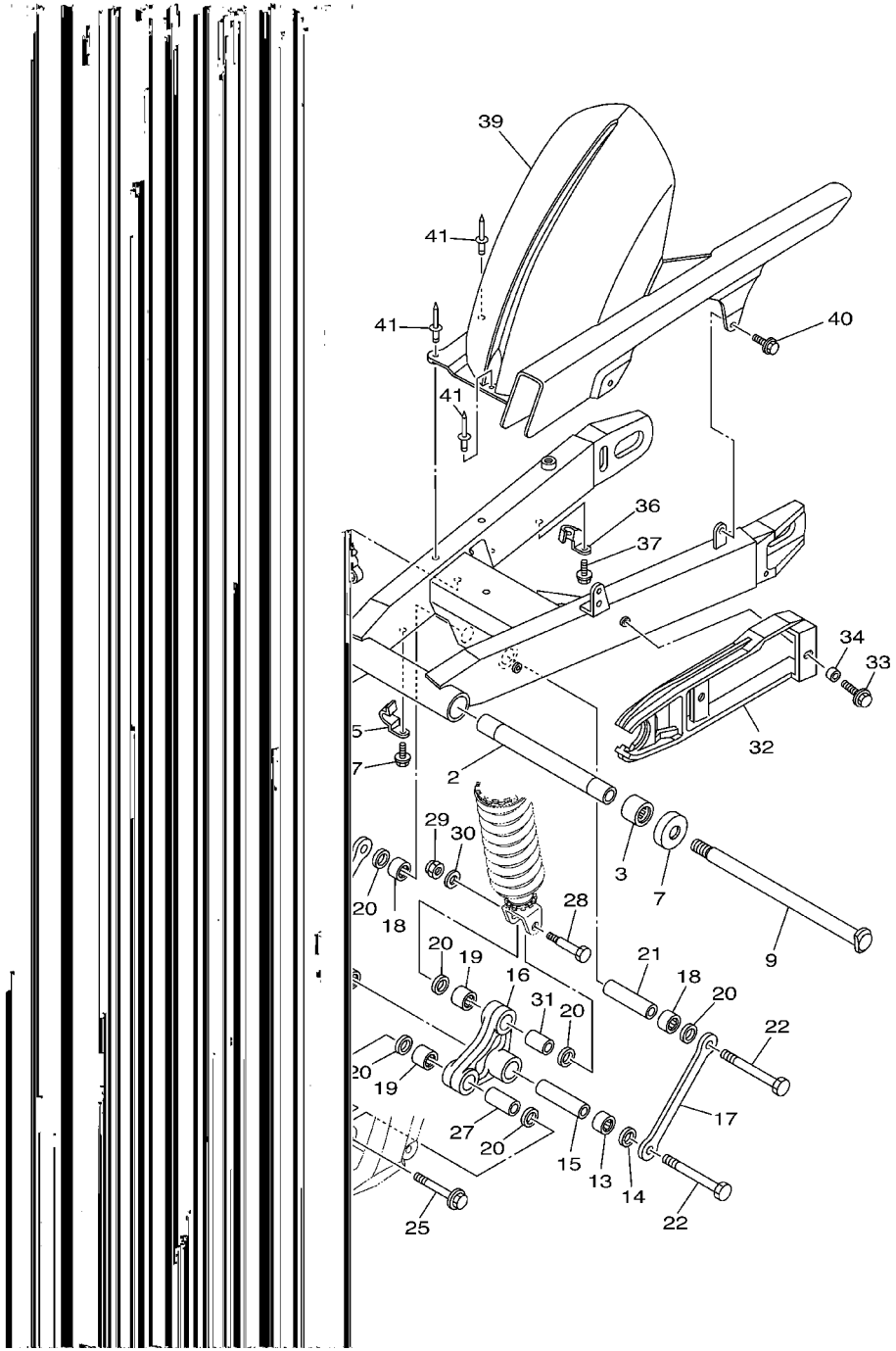

FIG. 22 REAR ARM

REF. NO.	PART NO.	DESCRIPTION	5PS1	5PS2				REMARKS
28	90101–10659	BOLT	1	1				
29	95617–10100	NUT, U	1	1				
30	90201–101J1	WASHER, PLATE	1	1				
31	90387–127W0	COLLAR	1	1				
32	5PS–22151–00	SEAL, GUARD	1	1				
33	90119–06096	BOLT, WITH WASHER	2	2				
34	90387–06372	COLLAR	2	2				
35	5PS–25875–00	HOLDER, BRAKE HOSE 1	1	1				
36	4NK–25876–00	HOLDER, BRAKE HOSE 2	1	1				
37	95027–06016	BOLT, FLANGE	2	2				
38	90464–18002	CLAMP	2	2				
39	5PS–21650–00	REAR FENDER COMP.	1	1				
40	90119–06117	BOLT, WITH WASHER	2	2				
41	90269–08001	RIVET	3	3				

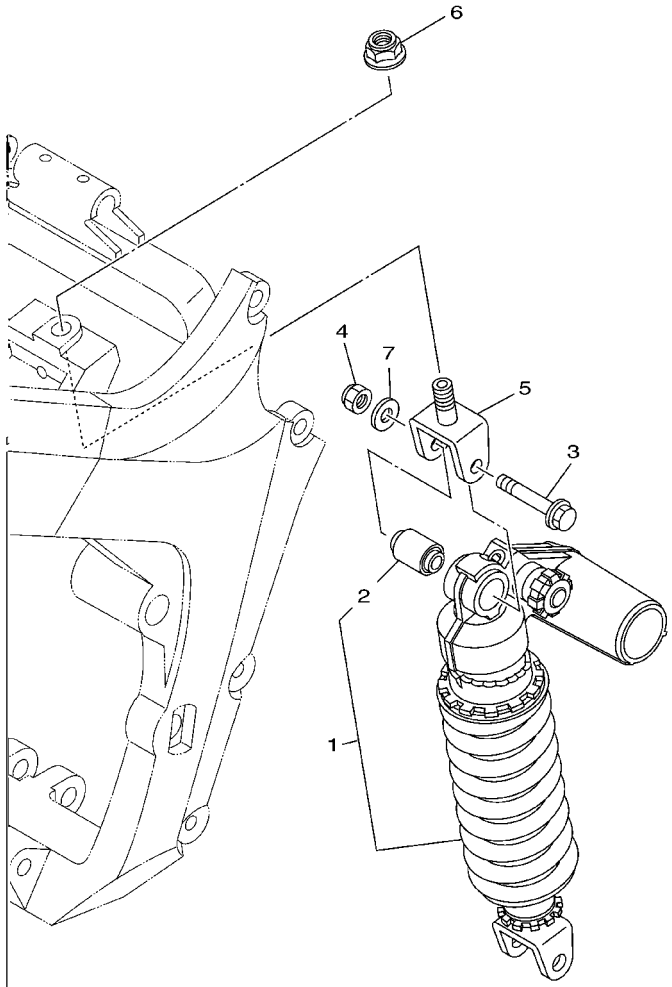

FIG. 23 REAR SUSPENSION

REF. NO.	PART NO.	DESCRIPTION	5PS1	5PS2				REMARKS
1	5PS–22210–00	SHOCK ABSORBER ASSY, REAR	1	1				
2	4GY–22216–20	.BUSH, REAR SHOCK ABSORBER	1	1				
3	90105–10402	BOLT, FLANGE	1	1				
4	95617–10100	NUT, U	1	1				
5	5PS–22219–00	BRACKET, UPPER	1	1				
6	95607–14200	NUT, SELF–LOCKING	1	1				
7	90201–101J1	WASHER, PLATE	1	1				

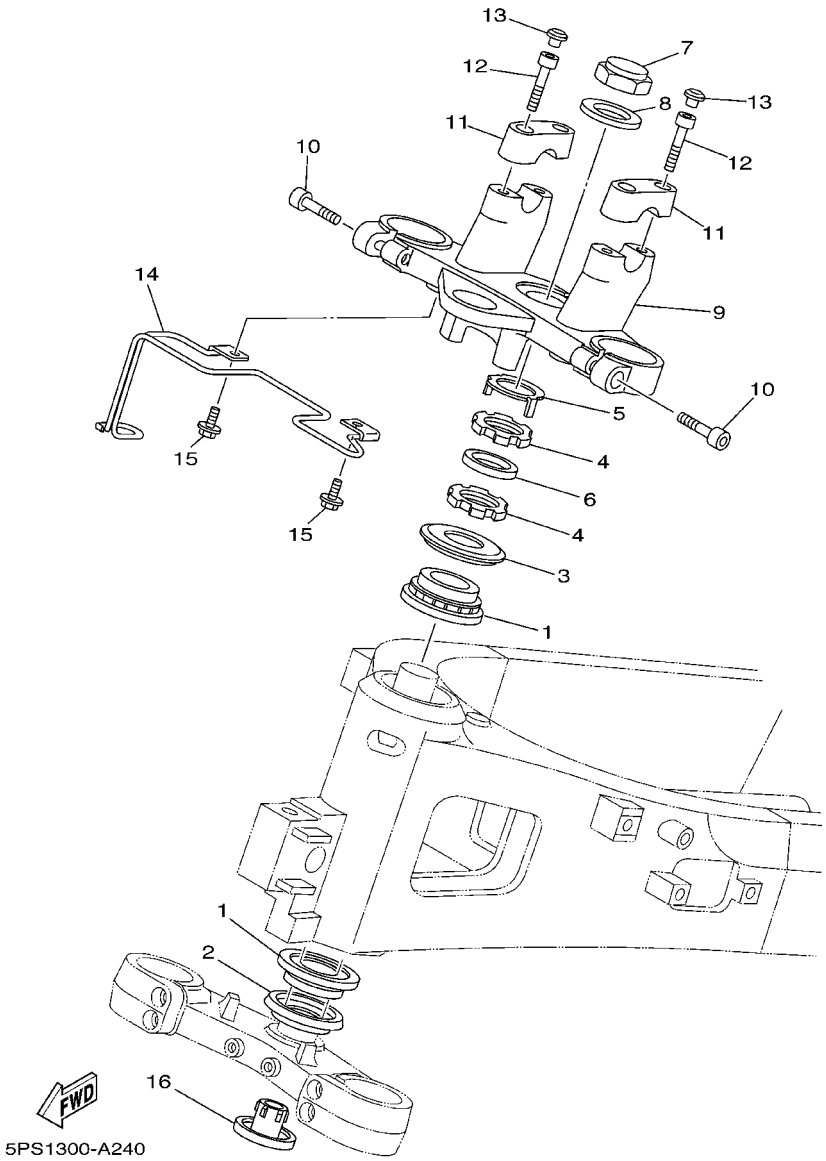

FIG. 24 STEERING

REF. NO.	PART NO.	DESCRIPTION	5PS1	5PS2				REMARKS
1	93399-99932	BEARING	2	2				
2	3FV-23462-00	SEAL, STEERING	1	1				
3	4XV-23415-01	COVER, BALL RACE 1	1	1				
4	90179-30691	NUT	2	2				
5	4XV-23418-00	WASHER, SPECIAL	1	1				
6	90202-30235	WASHER, PLATE	1	1				
7	90176-28083	NUT, CROWN	1	1				
8	90201-281U8	WASHER, PLATE	1	1				
9	5PS-23435-00	CROWN, HANDLE	1	1				
10	91314-08030	BOLT	2	2				
11	4H7-23441-00-P2	HOLDER, HANDLE UPPER	2	2				MT2
12	91314-08030	BOLT	4	4				
13	90338-08163	PLUG	4	4				
14	5PS-23389-00	GUIDE, CABLE	1	1				
15	90119-06228	BOLT, WITH WASHER	2	2				
16	4KM-23123-01	COVER, LOWER 1	1	1				

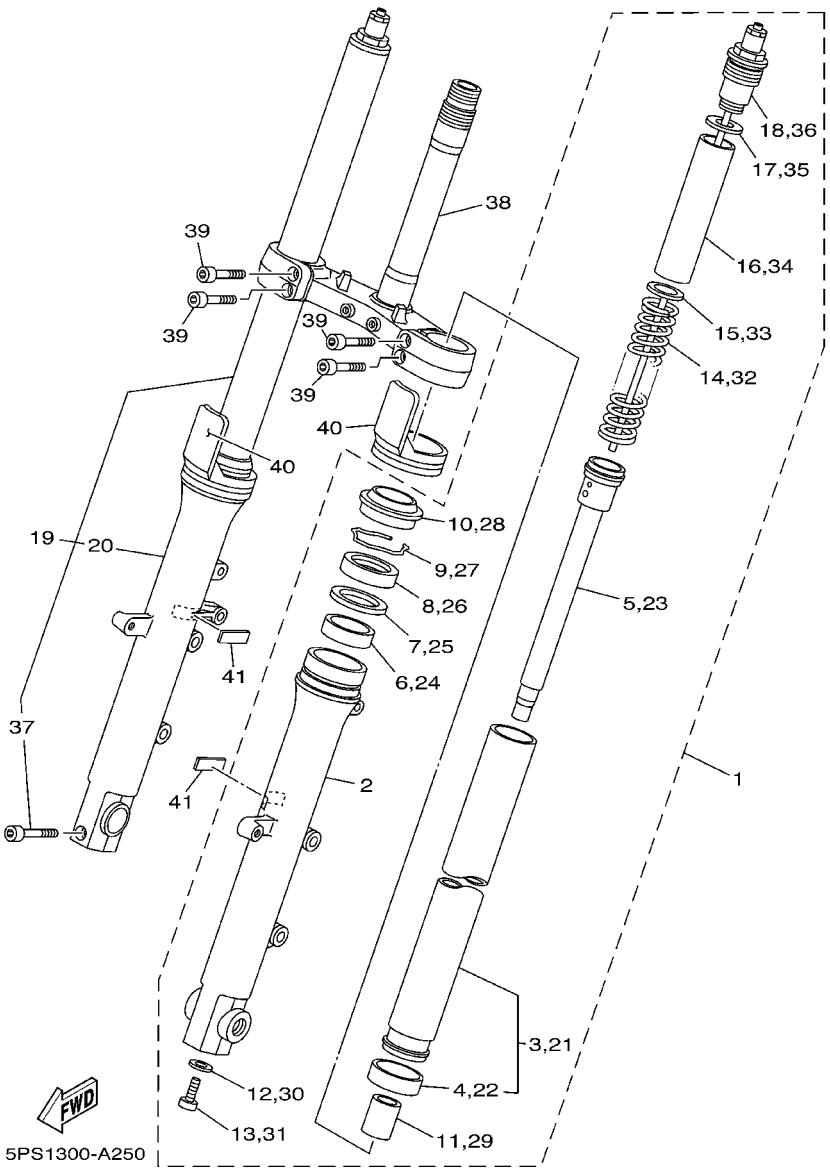

FIG. 25 FRONT FORK

REF. NO.	PART NO.	DESCRIPTION	5PS1	5PS2				REMARKS
1	5PS-23102-00	FRONT FORK ASSY (L.H)	1	1				
2	5PS-23126-00	.TUBE, OUTER (LEFT)	1	1				
3	5PS-23110-00	.INNER TUBE COMP.1	1	1				
4	3GM-23171-00	..PISTON, FRONT FORK	1	1				
5	5PS-23170-00	.CYLINDER COMP., FRONT FORK	1	1				
6	3GM-23125-00	.METAL, SLIDE 1	1	1				
7	4V4-23146-L0	.WASHER, OIL SEAL	1	1				
8	4PU-23145-01	.OIL SEAL	1	1				
9	4V4-23153-L0	.RING, SNAP	1	1				
10	4PU-23144-00	.SEAL, DUST	1	1				
11	5PS-23173-00	.SPINDLE, TAPER	1	1				
12	509-23158-L0	.GASKET	1	1				
13	278-23181-50	.BOLT, HEXAGON SOCKET HEAD	1	1				
14	5PS-23141-00	.SPRING, FRONT FORK	1	1				
15	3LR-23149-00	.WASHER, SPRING UPPER	1	1				
16	5EA-23118-10	.SPACER	1	1				
17	3FV-23149-00	.WASHER, SPRING UPPER	1	1				
18	5PS-23111-00	.BOLT, CAP	1	1				
19	5PS-23103-00	FRONT FORK ASSY (R.H)	1	1				
20	5PS-23136-00	.TUBE, OUTER (RIGHT)	1	1				
21	5PS-23110-00	.INNER TUBE COMP.1	1	1				
22	3GM-23171-00	..PISTON, FRONT FORK	1	1				
23	5PS-23170-00	.CYLINDER COMP., FRONT FORK	1	1				
24	3GM-23125-00	.METAL, SLIDE 1	1	1				
25	4V4-23146-L0	.WASHER, OIL SEAL	1	1				
26	4PU-23145-01	.OIL SEAL	1	1				
27	4V4-23153-L0	.RING, SNAP	1	1				

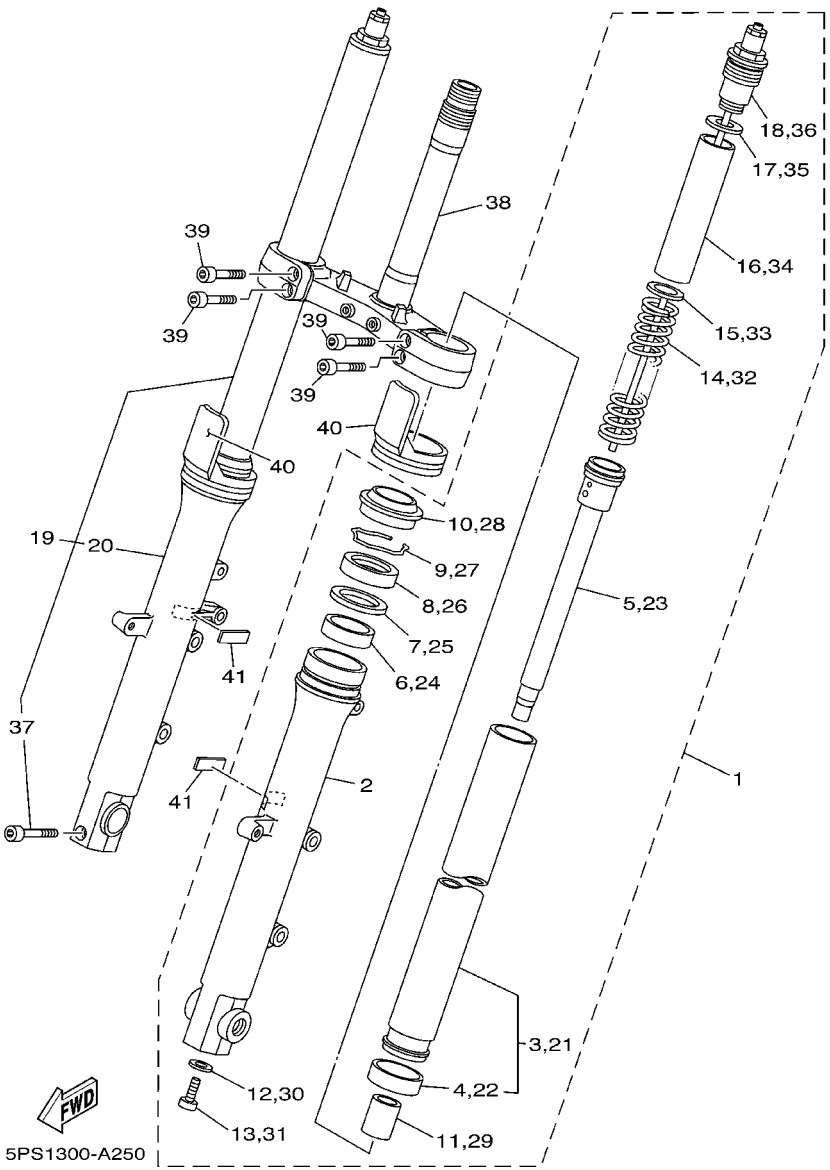

FIG. 25 FRONT FORK

REF. NO.	PART NO.	DESCRIPTION	5PS1	5PS2				REMARKS
28	4PU–23144–00	.SEAL, DUST	1	1				
29	5PS–23173–00	.SPINDLE, TAPER	1	1				
30	509–23158–L0	.GASKET	1	1				
31	278–23181–50	.BOLT, HEXAGON SOCKET HEAD	1	1				
32	5PS–23141–00	.SPRING, FRONT FORK	1	1				
33	3LR–23149–00	.WASHER, SPRING UPPER	1	1				
34	5EA–23118–10	.SPACER	1	1				
35	3FV–23149–00	.WASHER, SPRING UPPER	1	1				
36	5PS–23111–00	.BOLT, CAP	1	1				
37	91314–08040	.BOLT	1	1				
38	5PS–23340–00	UNDER BRACKET COMP.	1	1				
39	91317–08025	BOLT	4	4				
40	4PU–2331G–00	COVER	2	2				
41	4NX–21541–00	DAMPER 1	2	2				

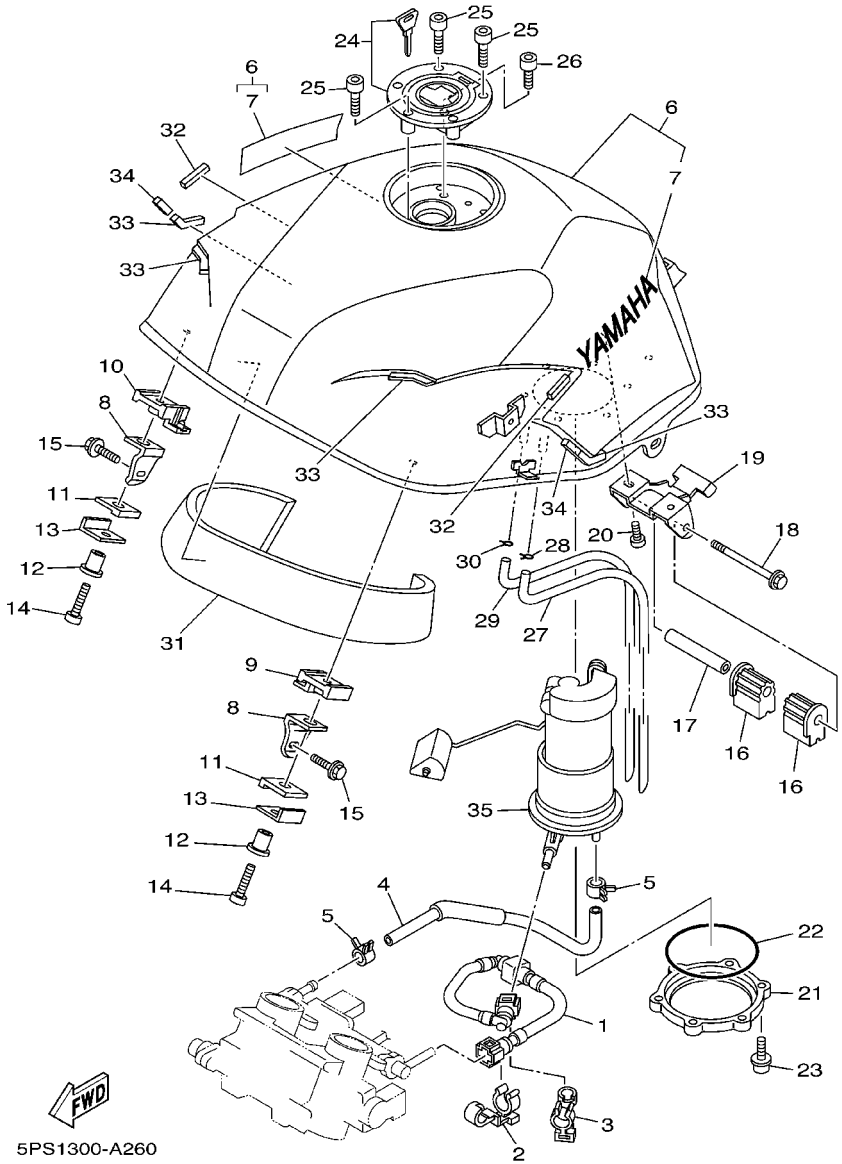

FIG. 26 FUEL TANK

REF. NO.	PART NO.	DESCRIPTION	5PS1	5PS2				REMARKS
1	5PS–13971–00	PIPE, FUEL 1	1	1				
2	90464–16007	CLAMP	1	1				
3	90464–16005	CLAMP	1	1				
4	5PS–13972–00	PIPE, FUEL 2	1	1				
5	90467–12003	CLIP	2	2				
6	5PS–Y2410–10–01	FUEL TANK COMP.	1	1				UR VDBMA
	5PS–Y2410–10–04	FUEL TANK COMP.	1	1				UR S3
	5PS–Y2410–10–02	FUEL TANK COMP.	1	1				UR RYC1
7	99226–00140	.EMBLEM, YAMAHA	2	2				UR FOR VDBMA
	99224–00140	.EMBLEM, YAMAHA	2	2				UR FOR S3, RYC1
8	5PS–24191–00	BRACKET, FUEL TANK 1	2	2				
9	5PS–24181–00	DAMPER, LOCATING 1	1	1				
10	5PS–24181–10	DAMPER, LOCATING 1	1	1				
11	5PS–24183–00	DAMPER, LOCATING 3	2	2				
12	90387–0602Y	COLLAR	2	2				
13	5PS–24186–00	WASHER, SPECIAL	2	2				
14	92017–06025	BOLT, BUTTON HEAD	2	2				
15	95807–08016	BOLT, FLANGE	2	2				
16	5EB–24183–00	DAMPER, LOCATING 3	2	2				
17	90387–061W6	COLLAR	1	1				
18	95027–06090	BOLT, FLANGE	1	1				
19	5PS–24192–00	BRACKET, FUEL TANK 2	1	1				
20	92017–06010	BOLT, BUTTON HEAD	2	2				
21	5JW–24491–00	BRACKET, FUEL PUMP	1	1				
22	5JW–24486–00	O–RING	1	1				
23	90110–05014	BOLT, HEXAGON SOCKET HEAD	6	6				
24	5JJ–24602–00	CAP ASSY	1	1				

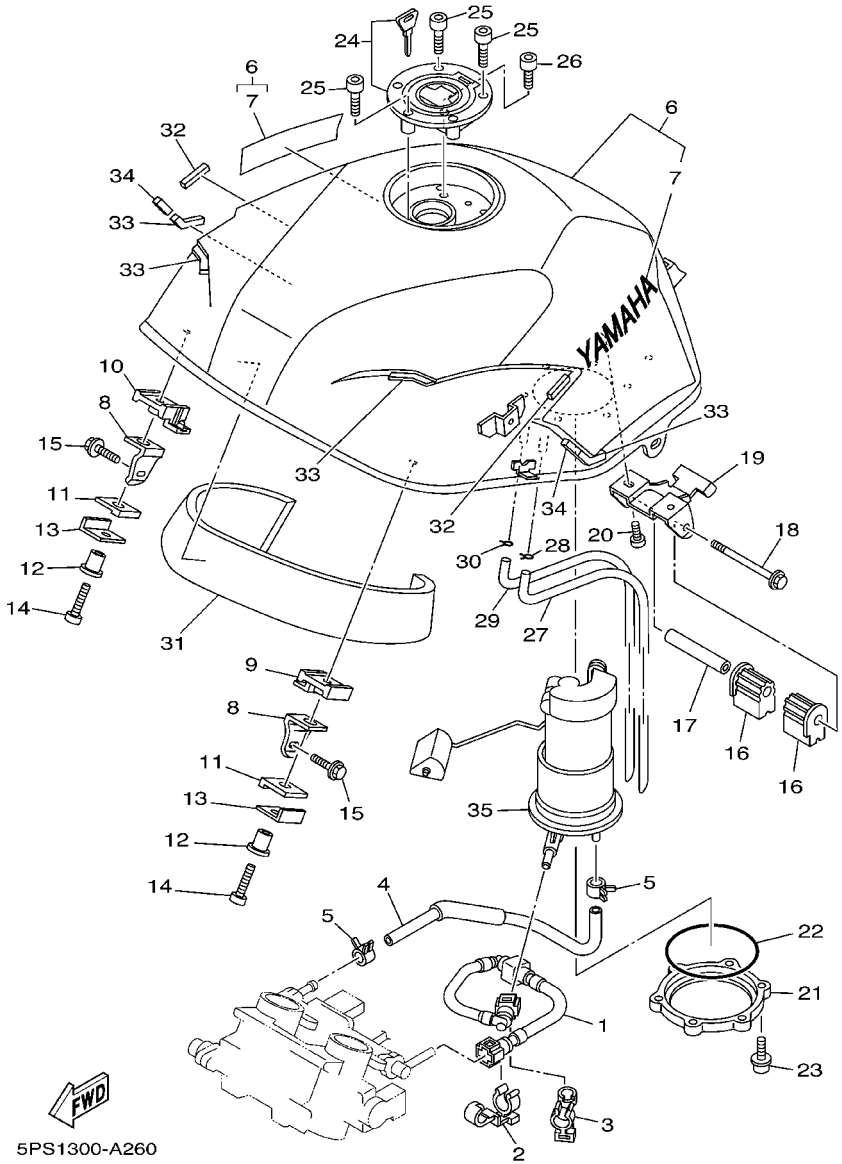

FIG. 26 FUEL TANK

REF. NO.	PART NO.	DESCRIPTION	5PS1	5PS2				REMARKS
25	90110-05112	BOLT, HEXAGON SOCKET HEAD	3	3				
26	91317-05010	BOLT	1	1				
27	5PS-24318-00	PIPE, OVERFLOW	1	1				
28	90467-09006	CLIP	1	1				
29	5PS-24318-00	PIPE, OVERFLOW	1	1				
30	90467-09006	CLIP	1	1				
31	5PS-2414H-00	DAMPER, PLATE 1	1	1				
32	5PS-28217-00	DAMPER 1	2	2				
33	5PS-2139X-00	DAMPER	4	4				
34	5PS-28372-00	DAMPER	2	2				
35	5PS-13907-00	FUEL PUMP COMP.	1	1				

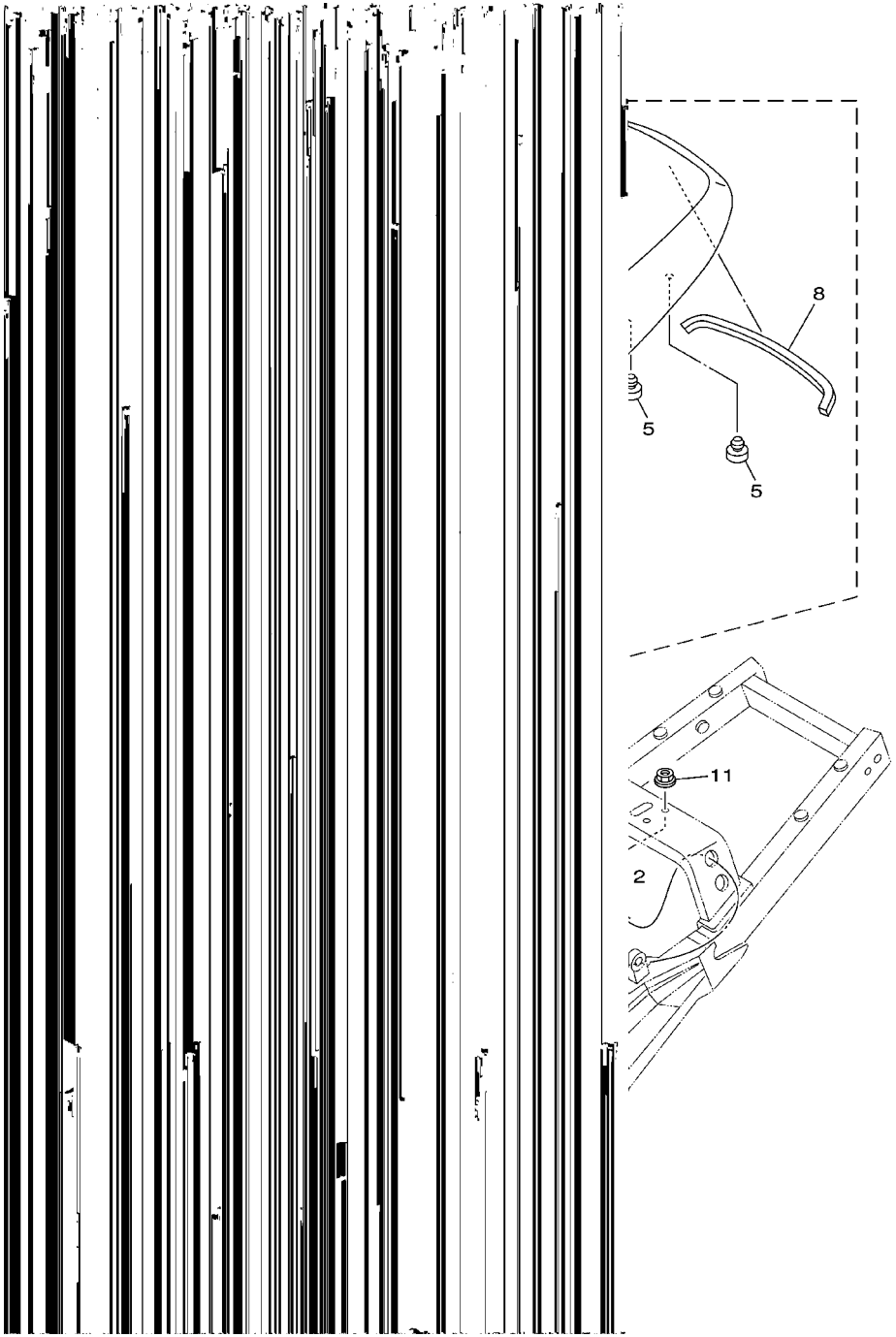

FIG. 27 SEAT

REF. NO.	PART NO.	DESCRIPTION	5PS1	5PS2				REMARKS
1	5PS-24730-00	DOUBLE SEAT ASSY	1	1				
2	5PS-2470F-00	.SEAT COVER COMP.	1	1				
3	4HM-24728-00	.BRACKET, SEAT	1	1				
4	90179-06635	.NUT	1	1				
5	22W-24741-00	.PAD, SEAT	2	2				
6	90338-06018	.PLUG	2	2				
7	5PS-24741-00	.PAD, SEAT	4	4				
8	5LV-24737-00	.DAMPER, SEAT	1	1				
9	4BP-24780-00	SEAT LOCK ASSY	1	1				
10	5PS-24792-00	PLATE	1	1				
11	95707-06500	NUT, FLANGE	2	2				
12	5PS-2478E-00	CABLE, SEAT LOCK	1	1				
13	2TV-W2470-00	SEAT LOCK ASSY	1	1				
14	5PS-2117K-00	STAY, LOCK	1	1				
15	5PS-24746-00	WASHER, SEAT	1	1				
16	90170-06183	NUT	2	2				
17	5JJ-2475X-01	COVER,2	1	1				
18	97707-40012	SCREW, TAPPING	2	2				

FIG. 28 FRONT WHEEL

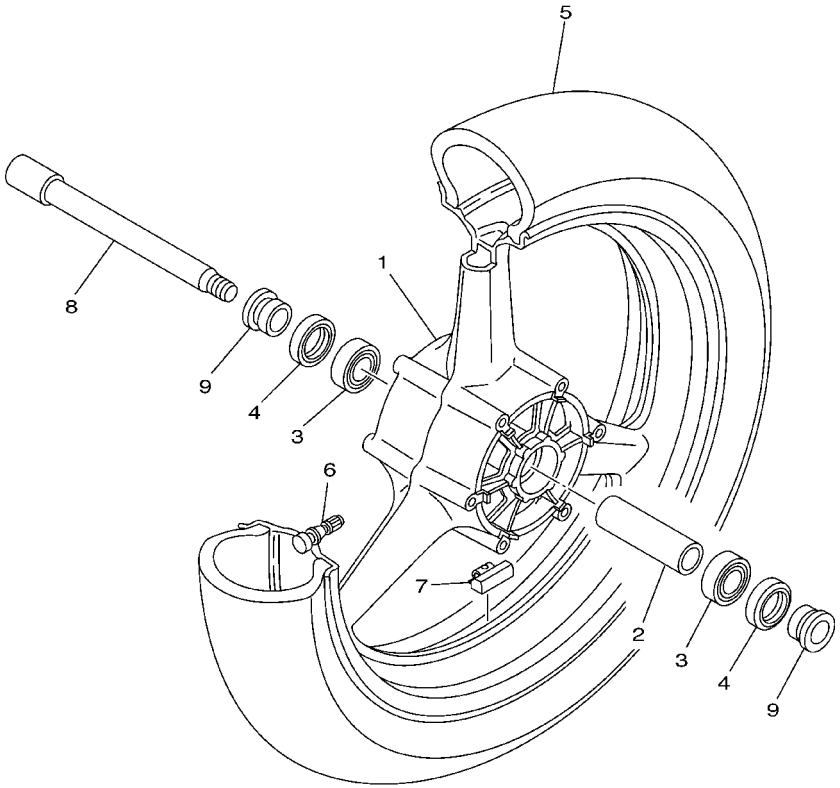

5PS1300-A280

REF. NO.	PART NO.	DESCRIPTION	5PS1	5PS2				REMARKS
1	5PS-25168-00-33	CAST WHEEL, FRONT	1	1				YB
2	4XV-25117-00	SPACER, BEARING	1	1				
3	93306-00420	BEARING (B6004)	2	2				
4	93106-28043	OIL SEAL	2	2				
5	94112-18019	TIRE (120/70ZR18 M/C(59W) D220FST)	1	1				UR DUNLOP
	*	TIRE (120/70ZR18 M/C(59W) MEZ4J)	1	1				UR LM METZELER
6	93900-00030	VALVE, RIM	1	1				
7	5MT-25398-00	BALANCER, WHEEL (10G)	1	1				UR
	5MT-25398-10	BALANCER, WHEEL (20G)	1	1				UR
	5MT-25398-20	BALANCER, WHEEL (30G)	1	1				UR
8	4XV-25181-00	AXLE, WHEEL	1	1				
9	90387-2200T	COLLAR	2	2				

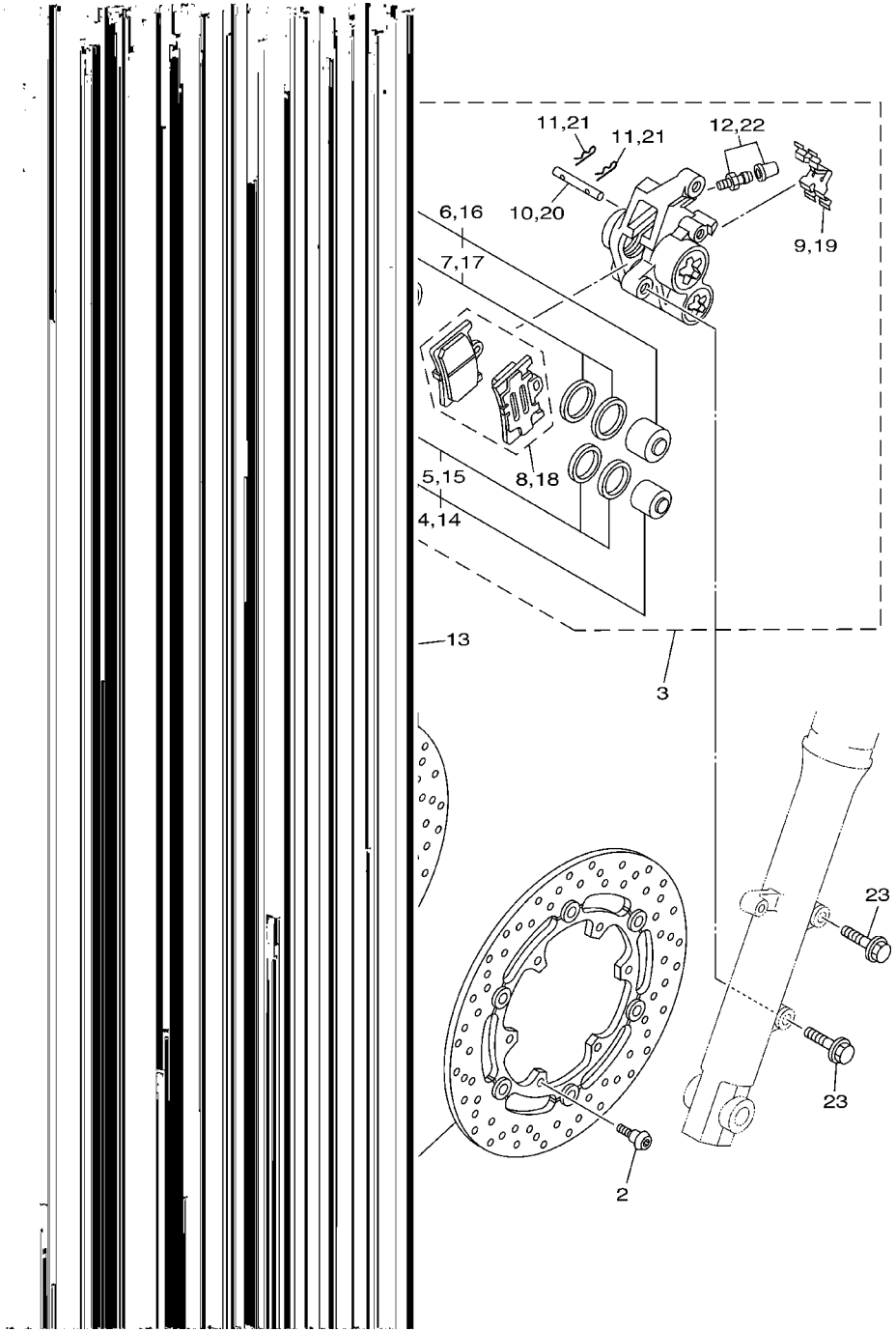

FIG. 29 FRONT BRAKE CALIPER

REF. NO.	PART NO.	DESCRIPTION	5PS1	5PS2				REMARKS
1	5PX–2581T–00	DISC BRAKE ASSY	2	2				
2	90109–064G6	BOLT	12	12				
3	5DM–2580T–00	CALIPER ASSY (LEFT)	1	1				
4	4SV–W0057–00	.PISTON ASSY, CALIPER	1	1				
5	3MA–W0047–10	..CALIPER SEAL KIT	1	1				
6	4SV–W0057–10	.PISTON ASSY, CALIPER	1	1				
7	3GM–W0047–10	..CALIPER SEAL KIT	1	1				
8	4SV–W0045–00	.BRAKE PAD KIT	1	1				
9	4SV–25919–00	.SUPPORT, PAD	1	1				
10	4SV–25924–00	.PIN, PAD	1	1				
11	3GM–25925–00	.CLIP	2	2				
12	1J3–W0048–00	.BLEED SCREW KIT	1	1				
13	5DM–2580U–00	CALIPER ASSY (RIGHT)	1	1				
14	4SV–W0057–00	.PISTON ASSY, CALIPER	1	1				
15	3MA–W0047–10	..CALIPER SEAL KIT	1	1				
16	4SV–W0057–10	.PISTON ASSY, CALIPER	1	1				
17	3GM–W0047–10	..CALIPER SEAL KIT	1	1				
18	4SV–W0045–00	.BRAKE PAD KIT	1	1				
19	4SV–25919–00	.SUPPORT, PAD	1	1				
20	4SV–25924–00	.PIN, PAD	1	1				
21	3GM–25925–00	.CLIP	2	2				
22	1J3–W0048–00	.BLEED SCREW KIT	1	1				
23	90105–105A7	BOLT, FLANGE	4	4				

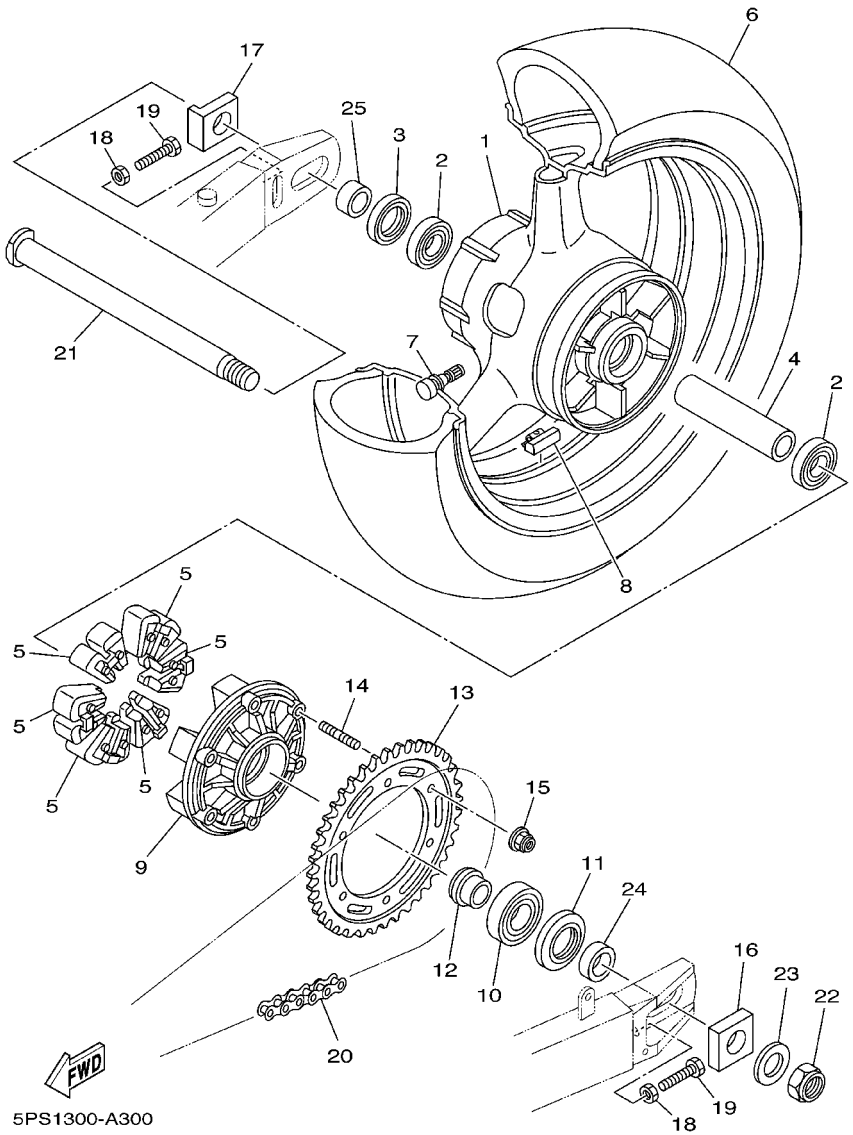

FIG. 30 REAR WHEEL

REF. NO.	PART NO.	DESCRIPTION	5PS1	5PS2				REMARKS
1	5PS-25338-00-33	CAST WHEEL, REAR	1	1				YB
2	93306-07806	BEARING	2	2				
3	93106-35042	OIL SEAL	1	1				
4	5PS-25317-00	SPACER, BEARING	1	1				
5	5EA-25364-00	DAMPER	6	6				
6	94116-17008	TIRE (160/60ZR17 M/C(69W) D220ST)	1	1				UR DUNLOP
	*	TIRE (160/60ZR17 M/C(69W) MEZ4J)	1	1				UR LM METZELER
7	93900-00030	VALVE, RIM	1	1				
8	5MT-25398-00	BALANCER, WHEEL (10G)	1	1				UR
	5MT-25398-10	BALANCER, WHEEL (20G)	1	1				UR
	5MT-25398-20	BALANCER, WHEEL (30G)	1	1				UR
9	5PS-25366-00	CLUTCH, HUB	1	1				
10	93306-20644	BEARING	1	1				
11	93106-40041	OIL SEAL	1	1				
12	4FM-25377-00	COLLAR, WHEEL	1	1				
13	5PS-25442-00	SPROCKET, DRIVEN (42T)	1	1				
14	90116-10575	BOLT, STUD	6	6				
15	95607-10200	NUT, SELF-LOCKING	6	6				
16	5EB-25388-00	PULLER, CHAIN 1	1	1				
17	5PS-25389-00	PULLER, CHAIN 2	1	1				
18	95307-08600	NUT	2	2				
19	90101-08766	BOLT	2	2				
20	94581-46118	CHAIN (D.I.D.525HV-118LE)	1	1				
21	4FM-25381-10	AXLE, WHEEL	1	1				
22	90185-24165	NUT, SELF-LOCKING	1	1				
23	90201-257R5	WASHER, PLATE	1	1				
24	5PS-25376-00	COLLAR, WHEEL	1	1				

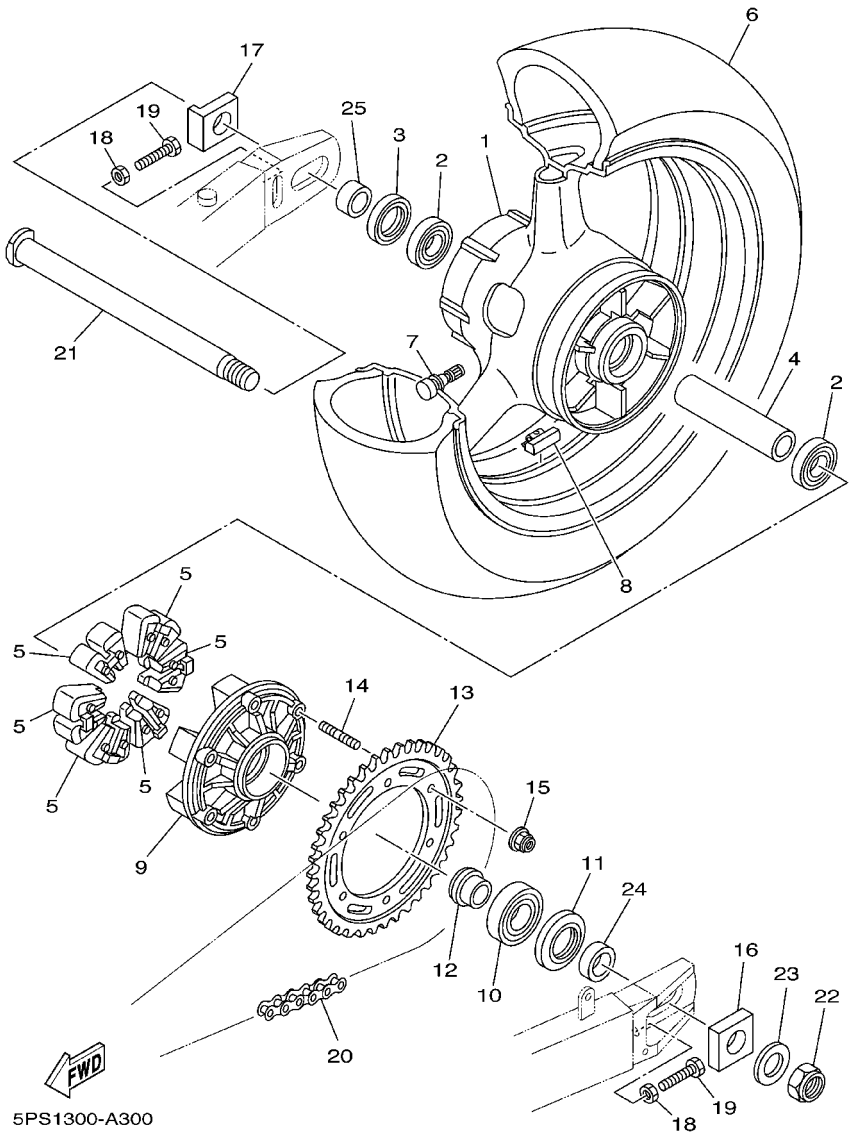

FIG. 30 REAR WHEEL

REF. NO.	PART NO.	DESCRIPTION	5PS1	5PS2				REMARKS
25	5EB–25377–00	COLLAR, WHEEL	1	1				

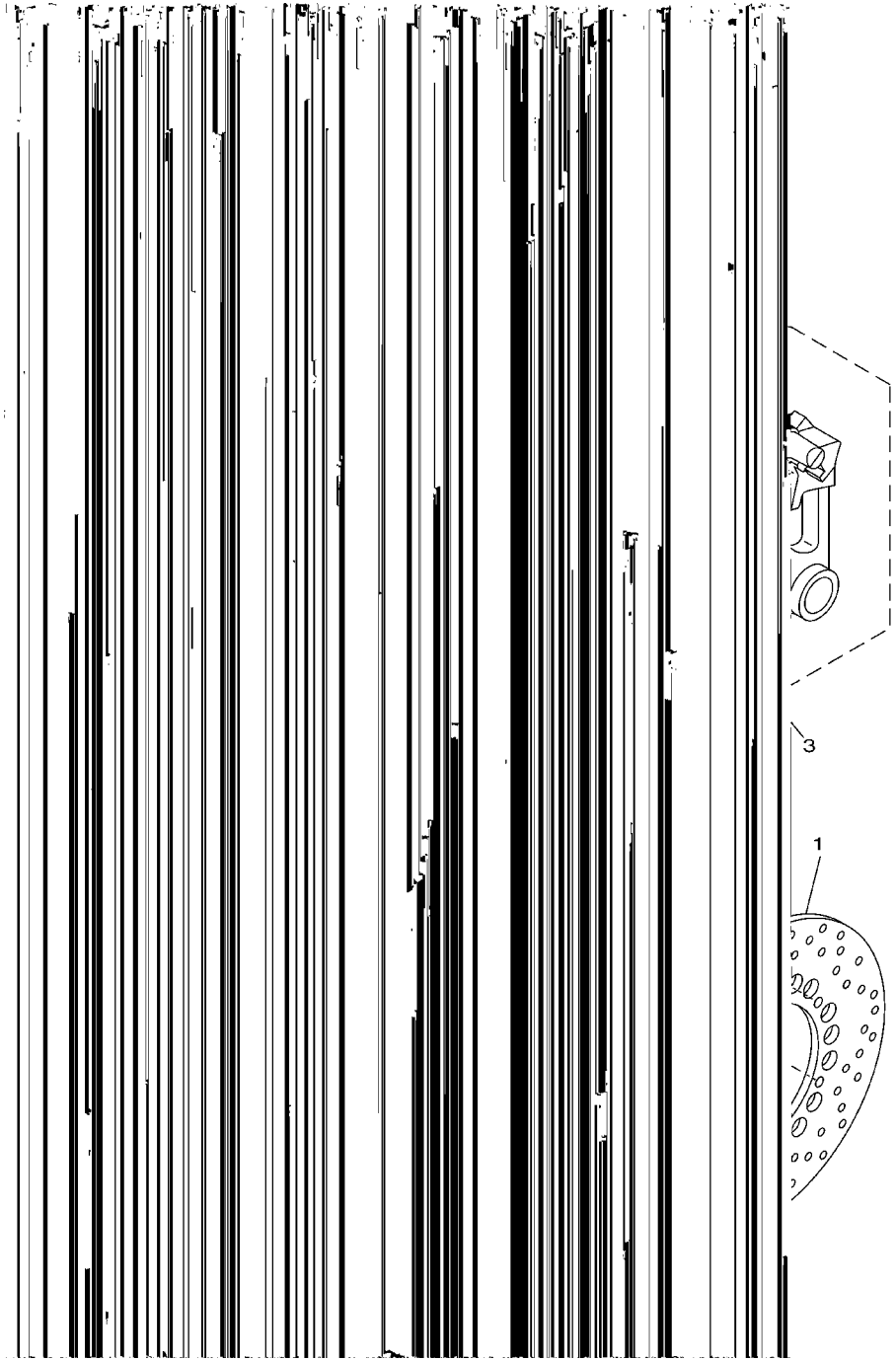

FIG. 31 REAR BRAKE CALIPER

REF. NO.	PART NO.	DESCRIPTION	5PS1	5PS2				REMARKS
1	4JH-2582W-00	DISC, REAR BRAKE 2	1	1				
2	90109-083G4	BOLT	6	6				
3	5PS-2580W-00	CALIPER ASSY, REAR 2	1	1				
4	5JW-W0057-00	.PISTON ASSY, CALIPER	1	1				
5	5JW-W0047-00	..CALIPER SEAL KIT	1	1				
6	5JW-25914-10	.PIN, SLIDE	2	2				
7	4TT-25937-00	.BOOT 2	2	2				
8	5PS-W0046-00	.BRAKE PAD KIT 2	1	1				
9	5JW-25919-00	.SUPPORT, PAD	2	2				
10	5GJ-25827-00	.SHIM, CALIPER	2	2				
11	51L-W0048-00	.BLEED SCREW KIT	1	1				
12	90105-08386	BOLT, FLANGE	1	1				

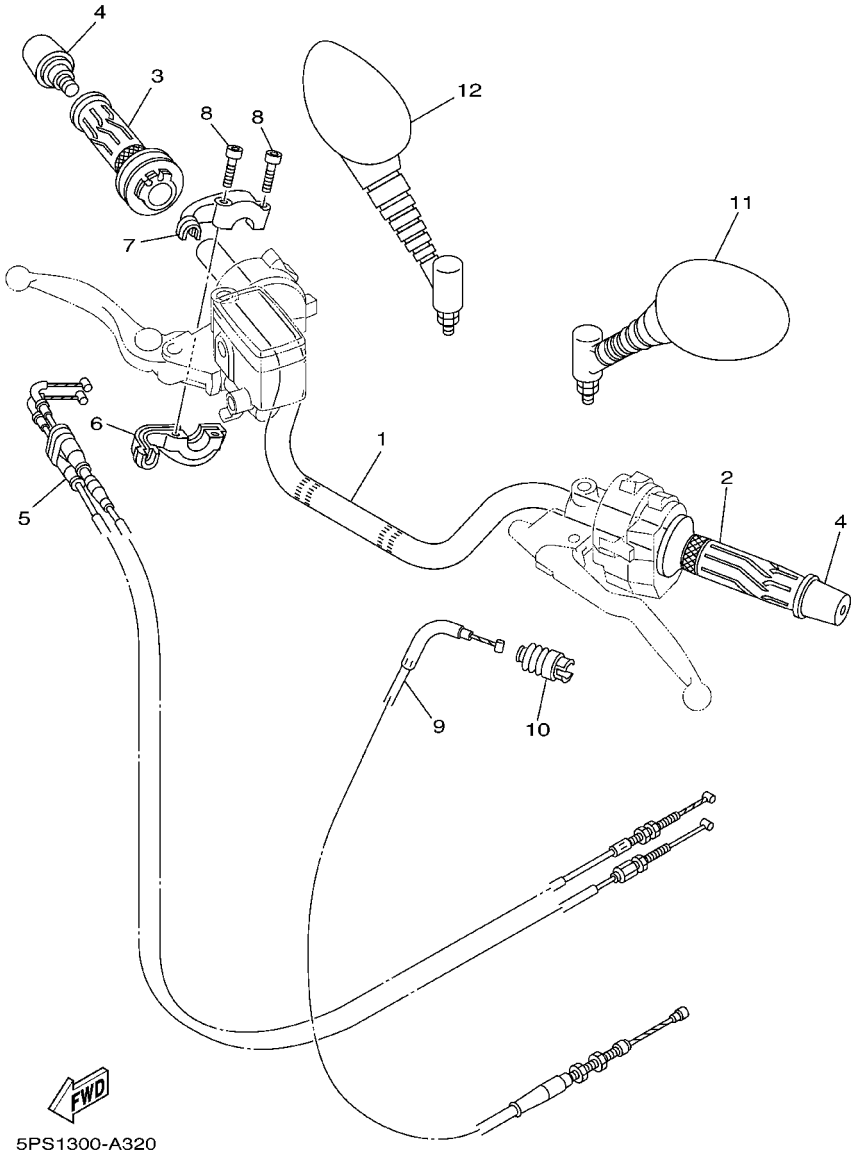

FIG. 32 STEERING HANDLE. CABLE

REF. NO.	PART NO.	DESCRIPTION	5PS1	5PS2				REMARKS
1	5PS-26111-00	HANDLEBAR	1	1				
2	5JW-26241-00	GRIP	1	1				
3	5PS-26240-00	GRIP ASSY	1	1				
4	51J-26246-01	END, GRIP	2	2				
5	5PS-26302-00	THROTTLE CABLE ASSY	1	1				
6	4KG-26281-00	CAP, GRIP UPPER	1	1				
7	3XW-26282-01	CAP, GRIP LOWER	1	1				
8	91317-05035	BOLT	2	2				
9	5PS-26335-00	CABLE, CLUTCH	1	1				
10	1E6-26342-00	BOOT, CABLE	1	1				
11	4TX-26280-41	REAR VIEW MIRROR ASSY (LEFT)	1	1				
12	4TX-26290-41	REAR VIEW MIRROR ASSY (RIGHT)	1	1				

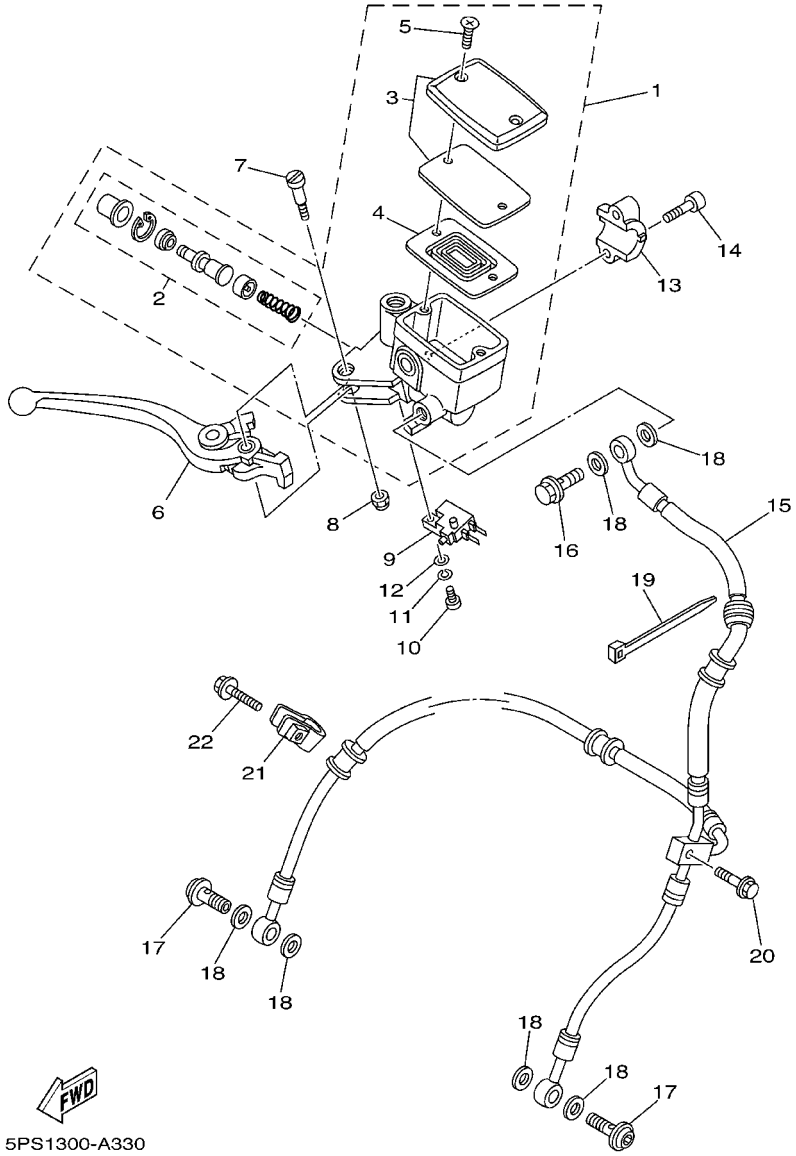

FIG. 33 FRONT MASTER CYLINDER

REF. NO.	PART NO.	DESCRIPTION	5PS1	5PS2				REMARKS
1	5DM-W2587-00	MASTER CYLINDER SUB ASSY	1	1				
2	5DM-W0041-50	.CYLINDER KIT, MASTER	1	1				
3	4HM-W2585-01	.RESERVOIR CAP SET	1	1				
4	4HM-25854-00	.DIAPHRAGM, RESERVOIR	1	1				
5	98706-04012	.SCREW, FLAT HEAD	2	2				
6	5EB-83922-01	LEVER 2	1	1				
7	3FV-2589F-00	BOLT, LEVER	1	1				
8	95606-06100	NUT, U	1	1				
9	4HM-83980-00	FRONT STOP SWITCH ASSY	1	1				
10	98502-04012	SCREW, PAN HEAD	1	1				
11	92902-04100	WASHER, SPRING	1	1				
12	92902-04600	WASHER, PLATE	1	1				
13	4HM-25867-00	BRACKET, MASTER CYLINDER	1	1				
14	91316-06020	BOLT	2	2				
15	5PS-25872-00	HOSE, BRAKE 1	1	1				
16	90401-10159	BOLT, UNION	1	1				
17	90401-10172	BOLT, UNION	2	2				
18	90201-10118	WASHER, PLATE	6	6				
19	1UA-82591-00	BAND	1	1				
20	95027-06020	BOLT, FLANGE	1	1				
21	2R8-25876-01	HOLDER, BRAKE HOSE 2	1	1				
22	95027-06020	BOLT, FLANGE	1	1				

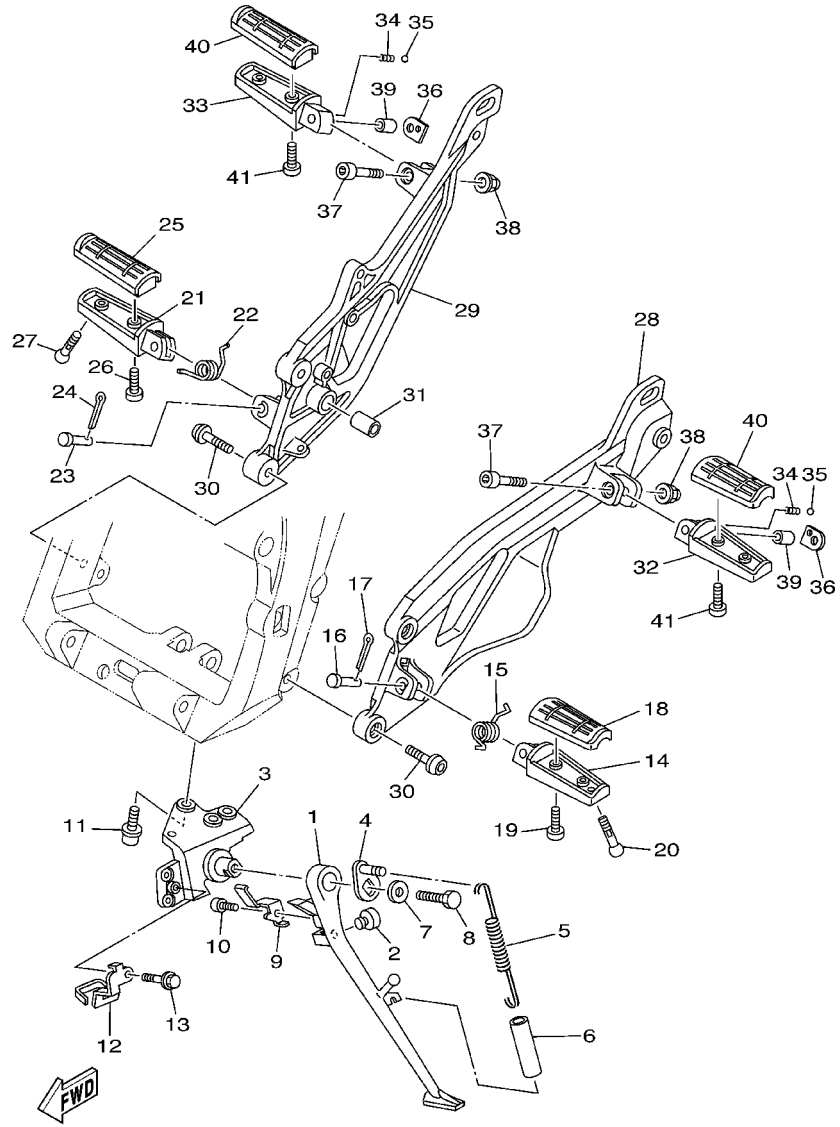

5PS1300-A340

FIG. 34 STAND. FOOTREST

REF. NO.	PART NO.	DESCRIPTION	5PS1	5PS2				REMARKS
1	5PS–27311–00	STAND, SIDE	1	1				
2	128–27114–00	STOPPER, MAIN STAND	1	1				
3	5PS–27321–00	BRACKET, SIDE STAND	1	1				
4	5PS–27352–00	HOOK, SIDE STAND	1	1				
5	90506–20008	SPRING, TENSION	1	1				
6	90445–197J2	HOSE (L60)	1	1				
7	90201–081R9	WASHER, PLATE	1	1				
8	90101–08662	BOLT	1	1				
9	5JJ–27315–00	LINK, SIDE STAND	1	1				
10	90110–06226	BOLT, HEXAGON SOCKET HEAD	1	1				
11	90109–082F5	BOLT	3	3				
12	5PS–27323–00	BRACKET 1	1	1				
13	95027–06010	BOLT, FLANGE	1	1				
14	4BH–27451–01	FOOTREST	1	1				
15	90508–20572	SPRING, TORSION	1	1				
16	90240–08084	PIN, CLEVIS	1	1				
17	91401–25015	PIN, COTTER	1	1				
18	3YX–27413–00	COVER, FOOTREST	1	1				
19	90157–05079	SCREW, PAN HEAD	2	2				
20	90109–083E2	BOLT	1	1				
21	4BH–27461–01	FOOTREST	1	1				
22	90508–20572	SPRING, TORSION	1	1				
23	90240–08084	PIN, CLEVIS	1	1				
24	91401–25015	PIN, COTTER	1	1				
25	3YX–27413–00	COVER, FOOTREST	1	1				
26	90157–05079	SCREW, PAN HEAD	2	2				
27	90109–083E2	BOLT	1	1				

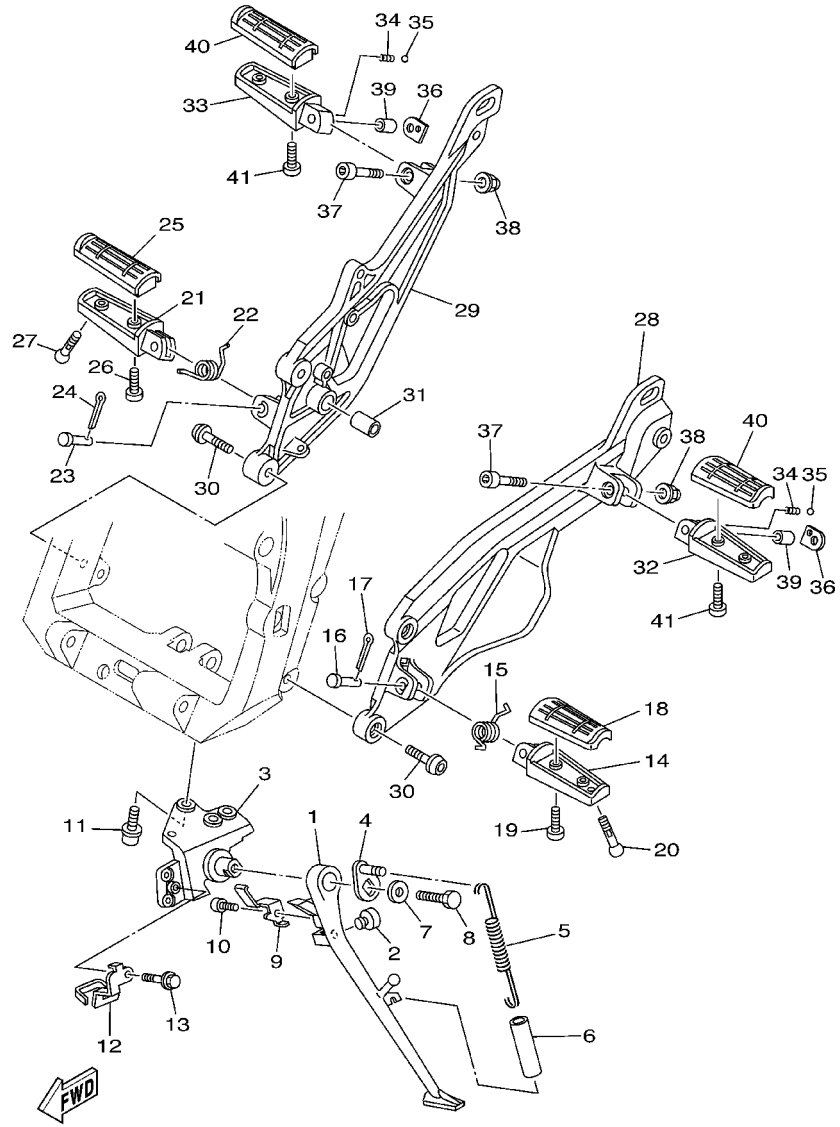

FIG. 34 STAND. FOOTREST

REF. NO.	PART NO.	DESCRIPTION	5PS1	5PS2				REMARKS
28	5PS-27442-00	BRACKET 2	1	1				
29	5PS-27443-00	BRACKET 3	1	1				
30	90110-08220	BOLT, HEXAGON SOCKET HEAD	4	4				
31	90383-14001	BUSH, FORMED	1	1				
32	5LV-27431-01	FOOTREST, REAR 1	1	1				
33	5LV-27441-01	FOOTREST, REAR 2	1	1				
34	90501-15001	SPRING, COMPRESSION	2	2				
35	93501-04011	BALL	2	2				
36	5JJ-27437-00	WASHER, SPECIAL	2	2				
37	91314-06040	BOLT	2	2				
38	95604-06200	NUT, U FLANGE	2	2				
39	90387-06014	COLLAR	2	2				
40	3YX-27413-00	COVER, FOOTREST	2	2				
41	90157-05134	SCREW, PAN HEAD	4	4				

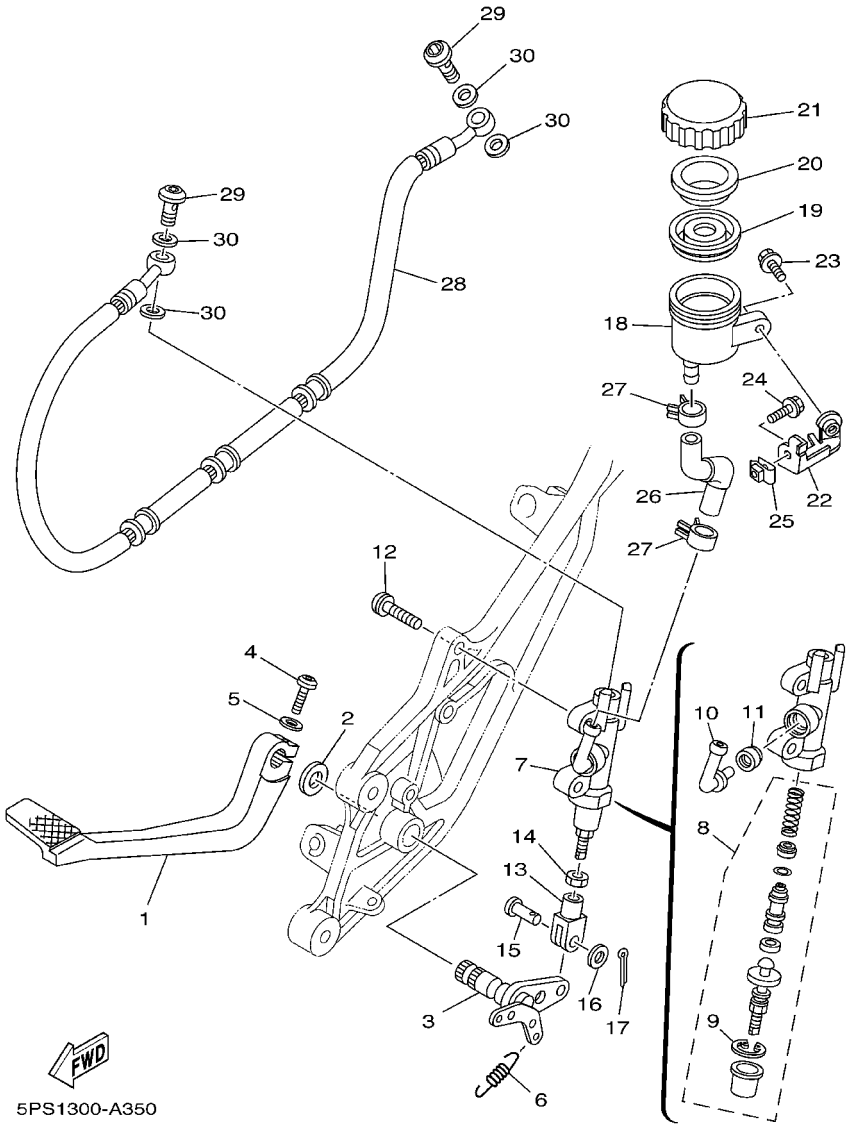

FIG. 35 REAR MASTER CYLINDER

REF. NO.	PART NO.	DESCRIPTION	5PS1	5PS2				REMARKS
1	5PS-27211-00	PEDAL, BRAKE	1	1				
2	90201-14215	WASHER, PLATE	1	1				
3	5PS-27212-00	SHAFT, BRAKE PEDAL	1	1				
4	92014-06025	BOLT, BUTTON HEAD	1	1				
5	92990-06600	WASHER, PLATE	1	1				
6	90506-20223	SPRING, TENSION	1	1				
7	4BH-2583V-00	RR. MASTER CYLINDER ASSY.	1	1				
8	4BH-W0042-50	.CYLINDER KIT, MASTER	1	1				
9	3LN-2585G-00	..CIRCLIP	1	1				
10	4BP-2582A-00	.JOINT	1	1				
11	4BP-2585F-00	.BUSH	1	1				
12	92014-08030	BOLT, BUTTON HEAD	2	2				
13	47X-27222-00	JOINT	1	1				
14	95307-08700	NUT	1	1				
15	90240-08013	PIN, CLEVIS	1	1				
16	90201-08083	WASHER, PLATE	1	1				
17	91401-20012	PIN, COTTER	1	1				
18	31A-25894-01	TANK, RESERVOIR	1	1				
19	360-25854-01	DIAPHRAGM, RESERVOIR	1	1				
20	2GU-25855-00	BUSH,DIAPHRAGM	1	1				
21	2KF-25852-50	CAP, RESERVOIR	1	1				
22	5PS-21228-00	BRACKET, RESERVE TANK	1	1				
23	90119-06044	BOLT, WITH WASHER	1	1				
24	95807-06014	BOLT, FLANGE	1	1				
25	90183-06023	NUT, SPRING	1	1				
26	5PS-25895-00	HOSE, RESERVOIR	1	1				
27	90467-14057	CLIP	2	2				

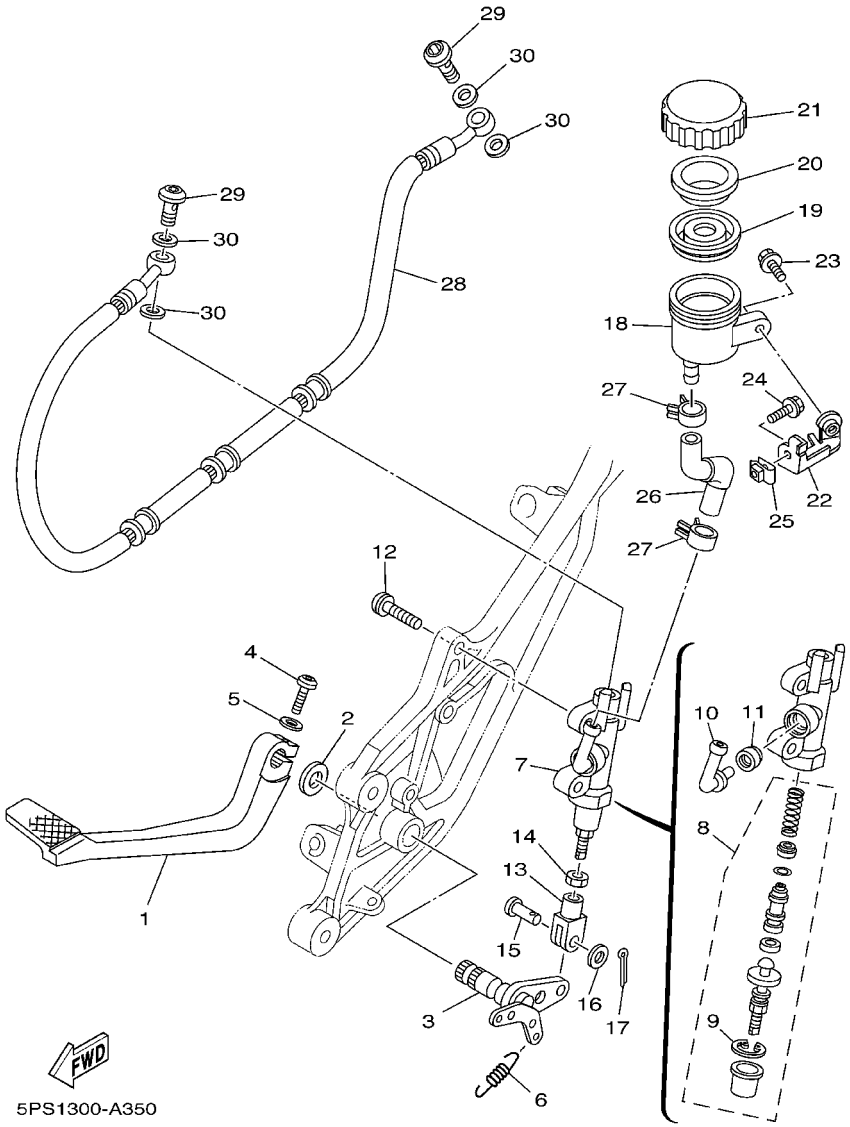

FIG. 35 REAR MASTER CYLINDER

REF. NO.	PART NO.	DESCRIPTION	5PS1	5PS2				REMARKS
28	5PS–25874–00	HOSE, BRAKE	1	1				
29	90401–10172	BOLT, UNION	2	2				
30	90201–10118	WASHER, PLATE	4	4				

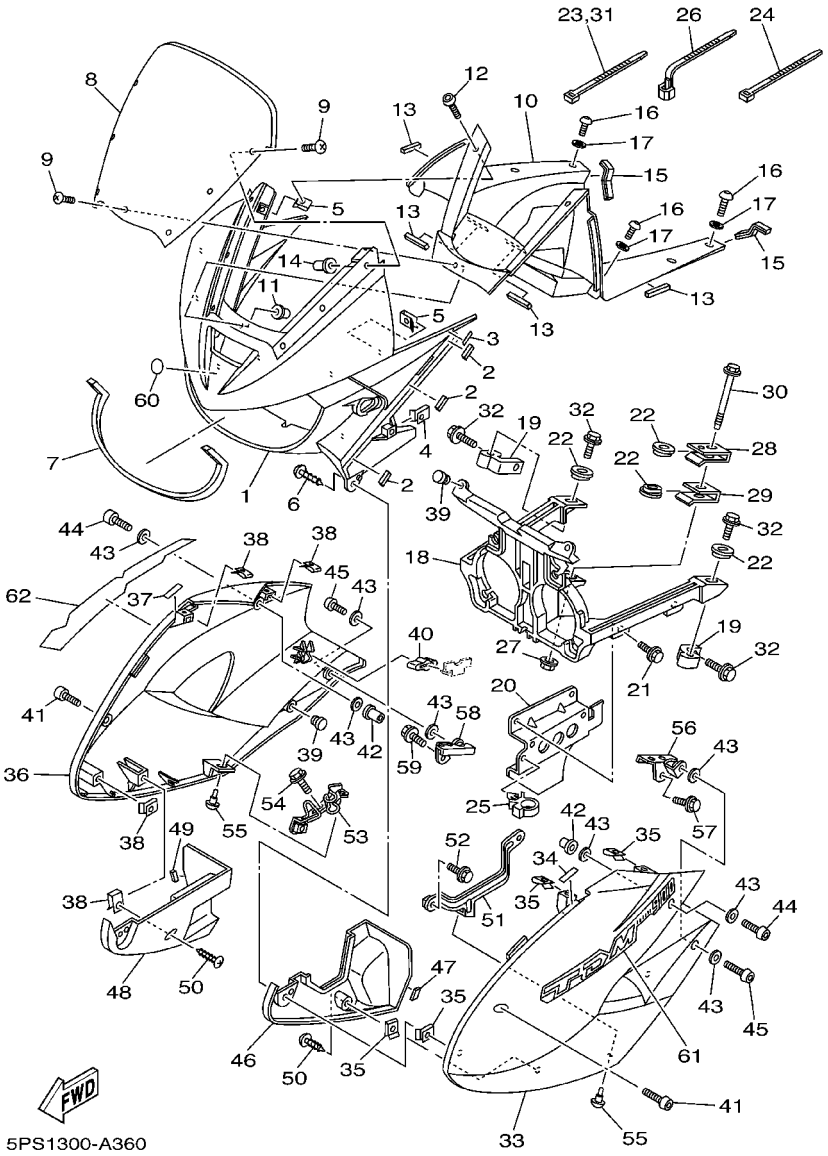

FIG. 36 COWLING 1

REF. NO.	PART NO.	DESCRIPTION	5PS1	5PS2				REMARKS
1	5PS-2835G-00-4B	BODY, FRONT UPPER 1	1	1				UR BL2 FOR VDBMA
	5PS-2835G-00-P0	BODY, FRONT UPPER 1	1	1				UR BS4 FOR S3
	5PS-2835G-00-P1	BODY, FRONT UPPER 1	1	1				UR S3 FOR RYC1
2	4TX-21717-00	DAMPER	6	6				
3	5PS-2178A-00	LABEL	1	1				
4	90183-05061	NUT, SPRING	2	2				
5	90183-05042	NUT, SPRING	4	4				
6	90167-05080	SCREW, TAPPING	2	2				
7	5PS-84163-00	DAMPER	1	1				
8	5PS-28381-00	WINDSHIELD	1	1				
9	90150-05024	SCREW, ROUND HEAD	7	7				
10	5PS-2836K-00	PANEL, INNER 1	1	1				
11	90179-05523	NUT	1	1				
12	90167-05080	SCREW, TAPPING	2	2				
13	5PS-28217-00	DAMPER 1	4	4				
14	90179-05523	NUT	6	6				
15	5PS-28345-00	MOLE 1	2	2				
16	90167-05076	SCREW, TAPPING	6	6				
17	90202-05224	WASHER, PLATE	6	6				
18	5PS-28356-00	STAY 1	1	1				
19	5PS-28332-00	STAY, LEG SHIELD	2	2				
20	5PS-28336-00	PLATE	1	1				
21	90119-06044	BOLT, WITH WASHER	2	2				
22	5PS-28373-00	COLLAR	4	4				
23	90465-10098	CLAMP	1	1				
24	90464-35132	CLAMP	1	1				
25	90464-07209	CLAMP	1	1				

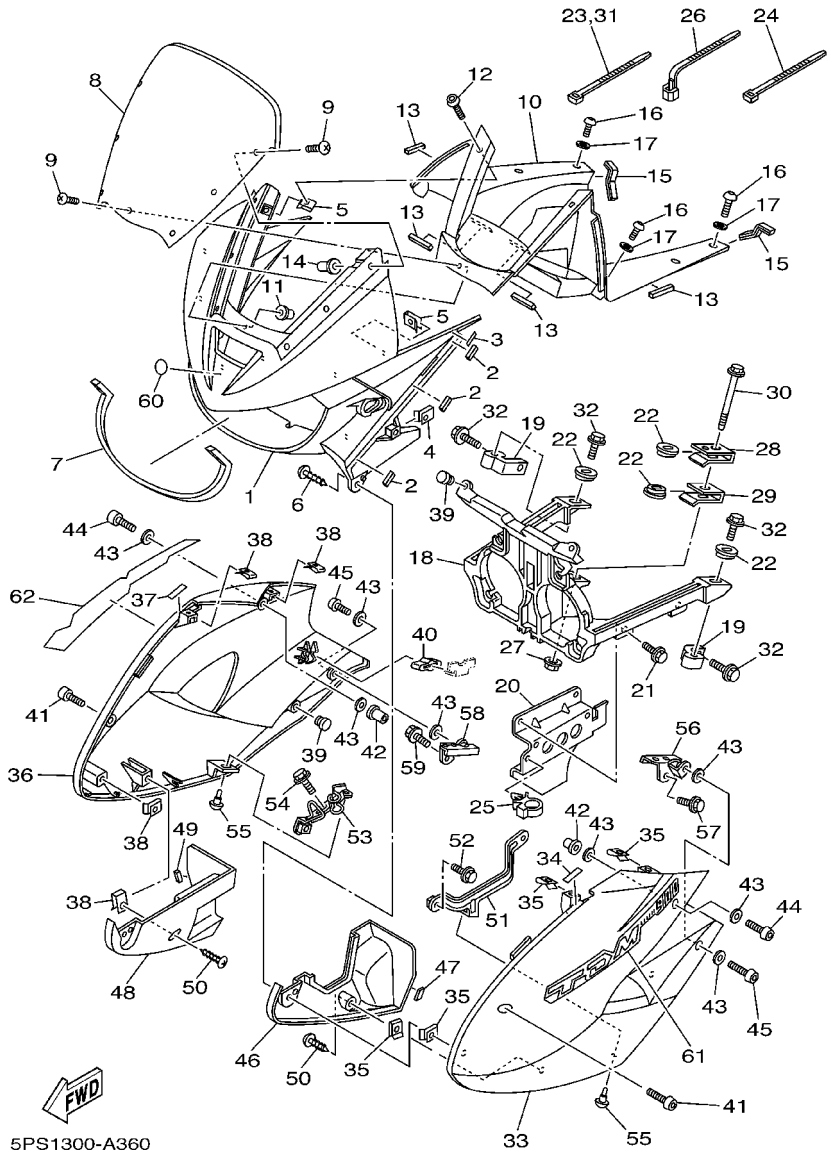

FIG. 36 COWLING 1

REF. NO.	PART NO.	DESCRIPTION	5PS1	5PS2				REMARKS
26	90464-15195	CLAMP	3	3				
27	95707-08500	NUT, FLANGE	1	1				
28	5PS-28396-00	PLATE 1	1	1				
29	5PS-28397-00	PLATE 2	1	1				
30	5PS-28331-00	BOLT, LEG SHIELD	1	1				
31	90465-10098	CLAMP	1	1				
32	95817-08025	BOLT, FLANGE	4	4				
33	5PS-2835U-00-P0	PANEL 1	1	1				UR VDBMA
	5PS-2835U-00-P1	PANEL 1	1	1				UR S3
	5PS-2835U-00-P2	PANEL 1	1	1				UR RYC1
34	5PS-2178A-00	LABEL	1	1				
35	90183-05042	NUT, SPRING	4	4				
36	5PS-2835V-00-P0	PANEL 2	1	1				UR VDBMA
	5PS-2835V-00-P1	PANEL 2	1	1				UR S3
	5PS-2835V-00-P2	PANEL 2	1	1				UR RYC1
37	5PS-2178A-00	LABEL	1	1				
38	90183-05042	NUT, SPRING	4	4				
39	90338-10132	PLUG	4	4				
40	15A-21717-00	DAMPER	2	2				
41	90110-05201	BOLT, HEXAGON SOCKET HEAD	2	2				
42	90179-05523	NUT	2	2				
43	90202-05224	WASHER, PLATE	8	8				
44	90149-05299	SCREW	2	2				
45	90110-05201	BOLT, HEXAGON SOCKET HEAD	2	2				
46	5PS-2837N-00	GRILL, AIR INTAKE 1	1	1				
47	4TX-21717-00	DAMPER	1	1				
48	5PS-2837R-00	GRILL, AIR INTAKE 2	1	1				

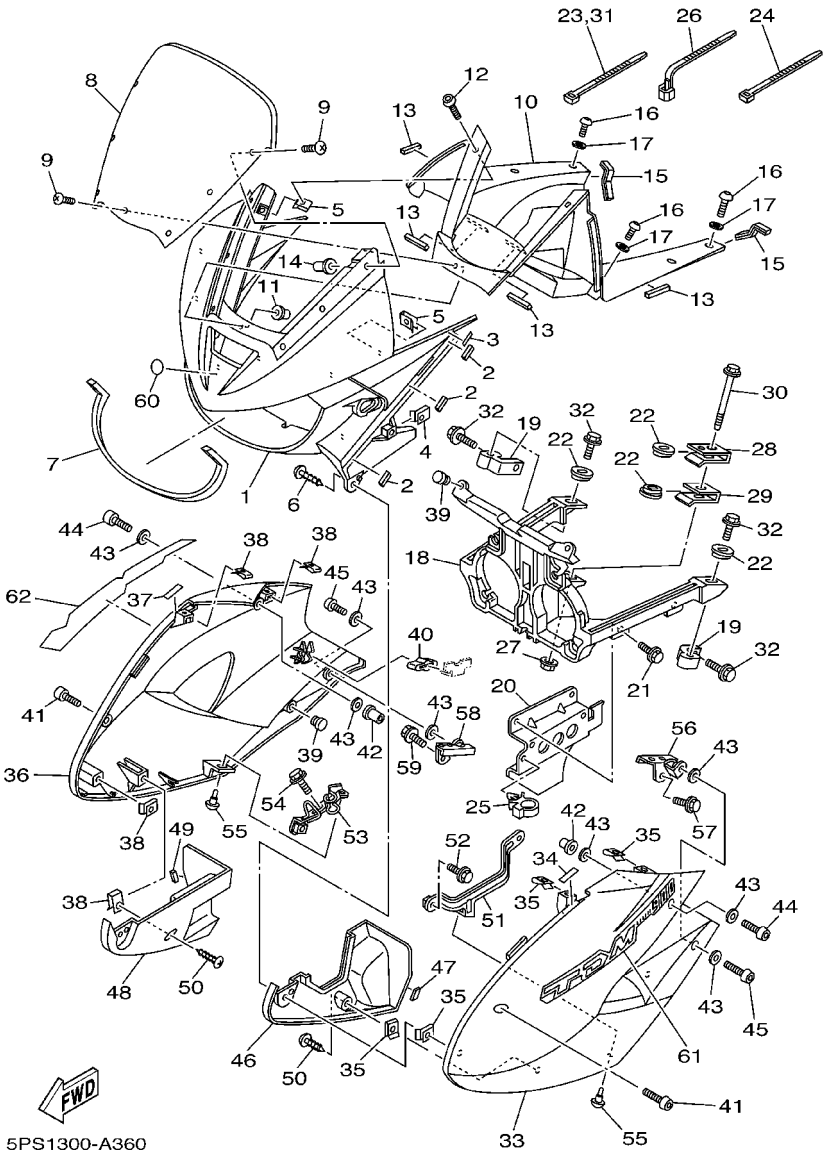

FIG. 36 COWLING 1

REF. NO.	PART NO.	DESCRIPTION	5PS1	5PS2				REMARKS
49	4TX-21717-00	DAMPER	1	1				
50	97707-50016	SCREW, TAPPING	2	2				
51	5PS-28321-00	STAY 1	1	1				
52	95807-06020	BOLT, FLANGE	1	1				
53	5PS-28357-00	STAY 2	1	1				
54	95807-06020	BOLT, FLANGE	2	2				
55	90269-07077	RIVET	2	2				
56	5PS-2836A-00	BRACKET 1	1	1				
57	95807-06012	BOLT, FLANGE	1	1				
58	5PS-2836E-00	BRACKET 2	1	1				
59	95807-06012	BOLT, FLANGE	1	1				
60	5LV-2836B-01	TUNING FORK MARK	1	1				
61	5PS-28391-00	GRAPHIC 1	1	1				UR FOR VDBMA
	5PS-28391-10	GRAPHIC 1	1	1				UR FOR S3
	5PS-28391-20	GRAPHIC 1	1	1				UR FOR RYC1
62	5PS-28392-00	GRAPHIC 2	1	1				UR FOR VDBMA
	5PS-28392-10	GRAPHIC 2	1	1				UR FOR S3
	5PS-28392-20	GRAPHIC 2	1	1				UR FOR RYC1

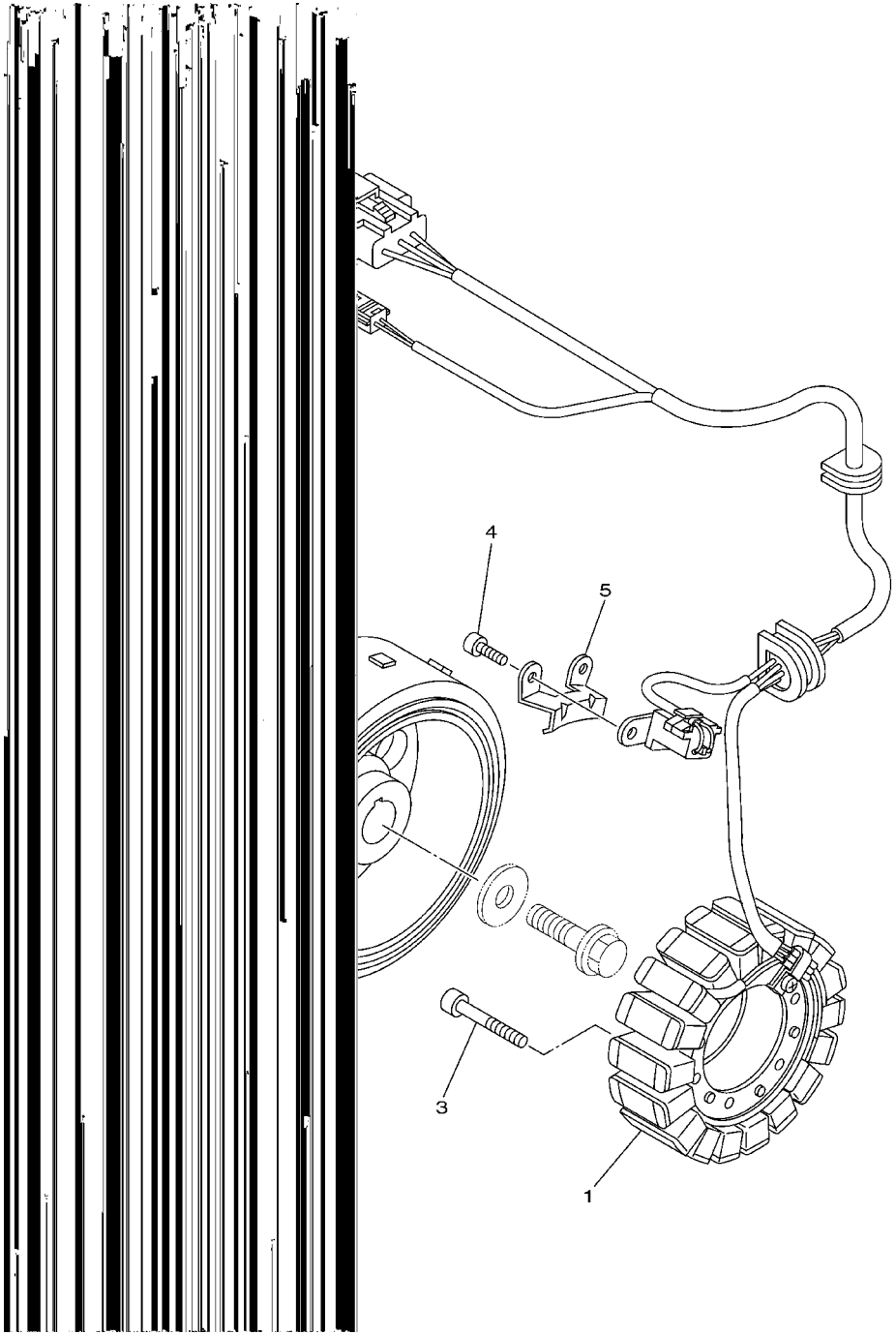

FIG. 37 GENERATOR

REF. NO.	PART NO.	DESCRIPTION	5PS1	5PS2				REMARKS
1	5PS–81410–00	STATOR ASSY	1	1				
2	5PS–81450–00	ROTOR ASSY	1	1				
3	90110–06042	BOLT, HEXAGON SOCKET HEAD	3	3				
4	90110–05011	BOLT, HEXAGON SOCKET HEAD	2	2				
5	90465–08380	CLAMP	1	1				

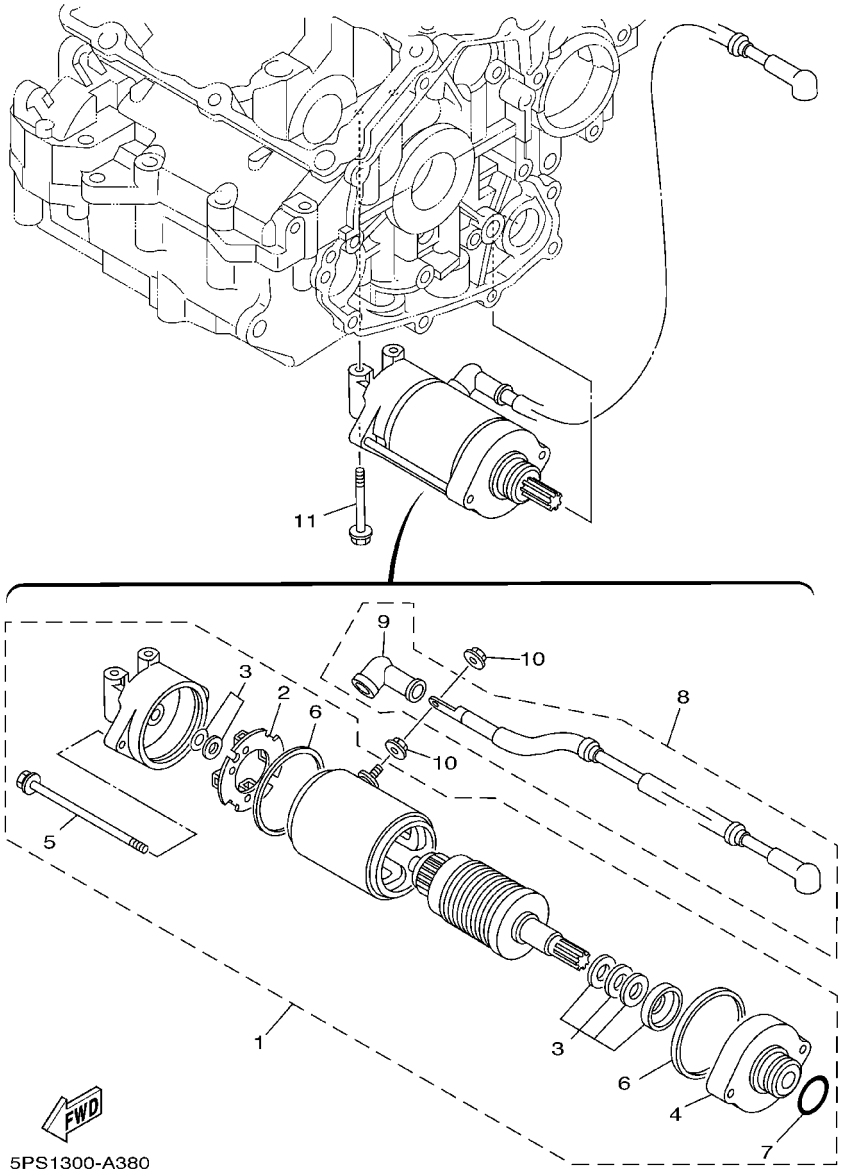

FIG. 38 STARTING MOTOR

REF. NO.	PART NO.	DESCRIPTION	5PS1	5PS2				REMARKS
1	3LD–81890–00	MOTOR ASSY	1	1				
2	3AJ–81801–00	.BRUSH SET	1	1				
3	3AJ–81809–00	.WASHER KIT	1	1				
4	3AJ–81830–00	.FRONT BRACKET ASSY	1	1				
5	3AJ–81826–00	.BOLT	2	2				
6	11H–81844–00	.GASKET	2	2				
7	1FK–81847–00	.O–RING	1	1				
8	1HX–81815–00	CORD, STARTER MOTOR	1	1				
9	4G0–81871–00	.CAP	1	1				
10	4XV–8182A–00	NUT	2	2				
11	95817–06050	BOLT, FLANGE	2	2				

FIG. 39 FLASHER LIGHT

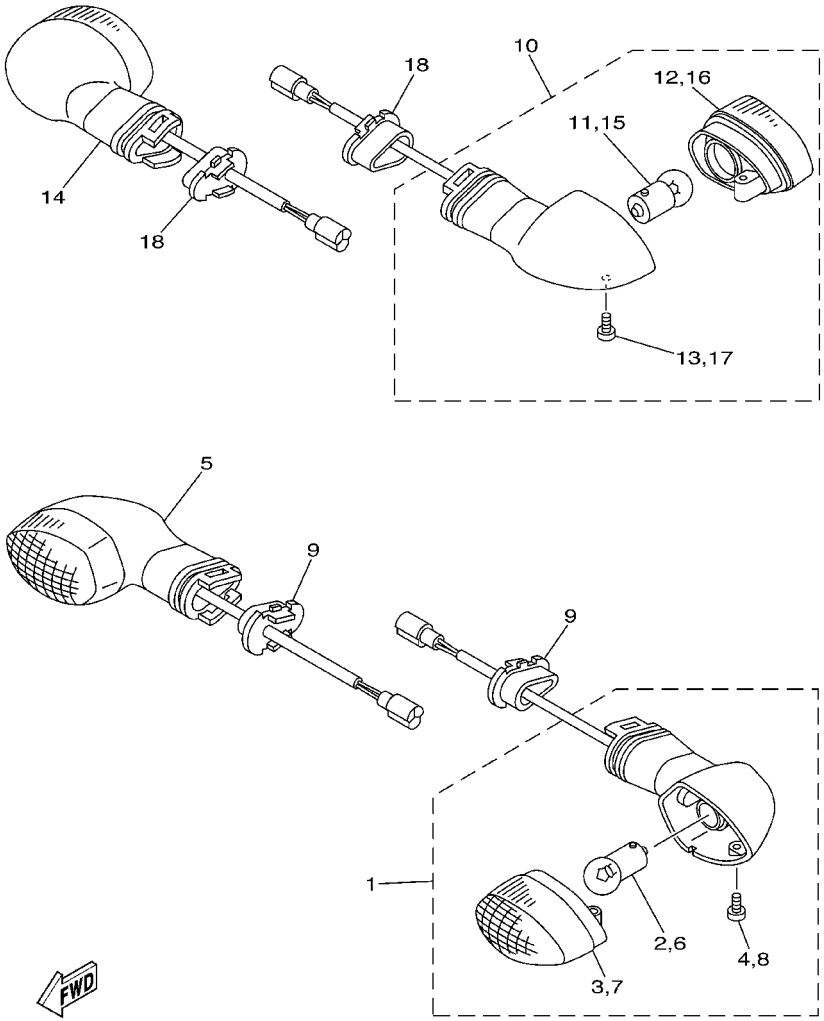

REF. NO.	PART NO.	DESCRIPTION	5PS1	5PS2				REMARKS
1	5PS-83310-00	FRONT FLASHER LIGHT ASSY 1	1	1				
2	1KH-83311-00	.BULB (12V-10W)	1	1				
3	5PW-8333A-00	.LENS COMP	1	1				
4	97706-04012	.SCREW, TAPPING	1	1				
5	5PS-83320-00	FRONT FLASHER LIGHT ASSY 2	1	1				
6	1KH-83311-00	.BULB (12V-10W)	1	1				
7	5PW-8334A-00	.LENS COMP	1	1				
8	97706-04012	.SCREW, TAPPING	1	1				
9	5PW-83318-00	STAY, FLASHER 1	2	2				
10	5PS-83330-00	REAR FLASHER LIGHT ASSY 1	1	1				
11	1KH-83311-00	.BULB (12V-10W)	1	1				
12	5PW-8334A-00	.LENS COMP	1	1				
13	97706-04012	.SCREW, TAPPING	1	1				
14	5PS-83340-00	FLASHER LIGHT ASSY 2	1	1				
15	1KH-83311-00	.BULB (12V-10W)	1	1				
16	5PW-8333A-00	.LENS COMP	1	1				
17	97706-04012	.SCREW, TAPPING	1	1				
18	5PW-83318-00	STAY, FLASHER 1	2	2				

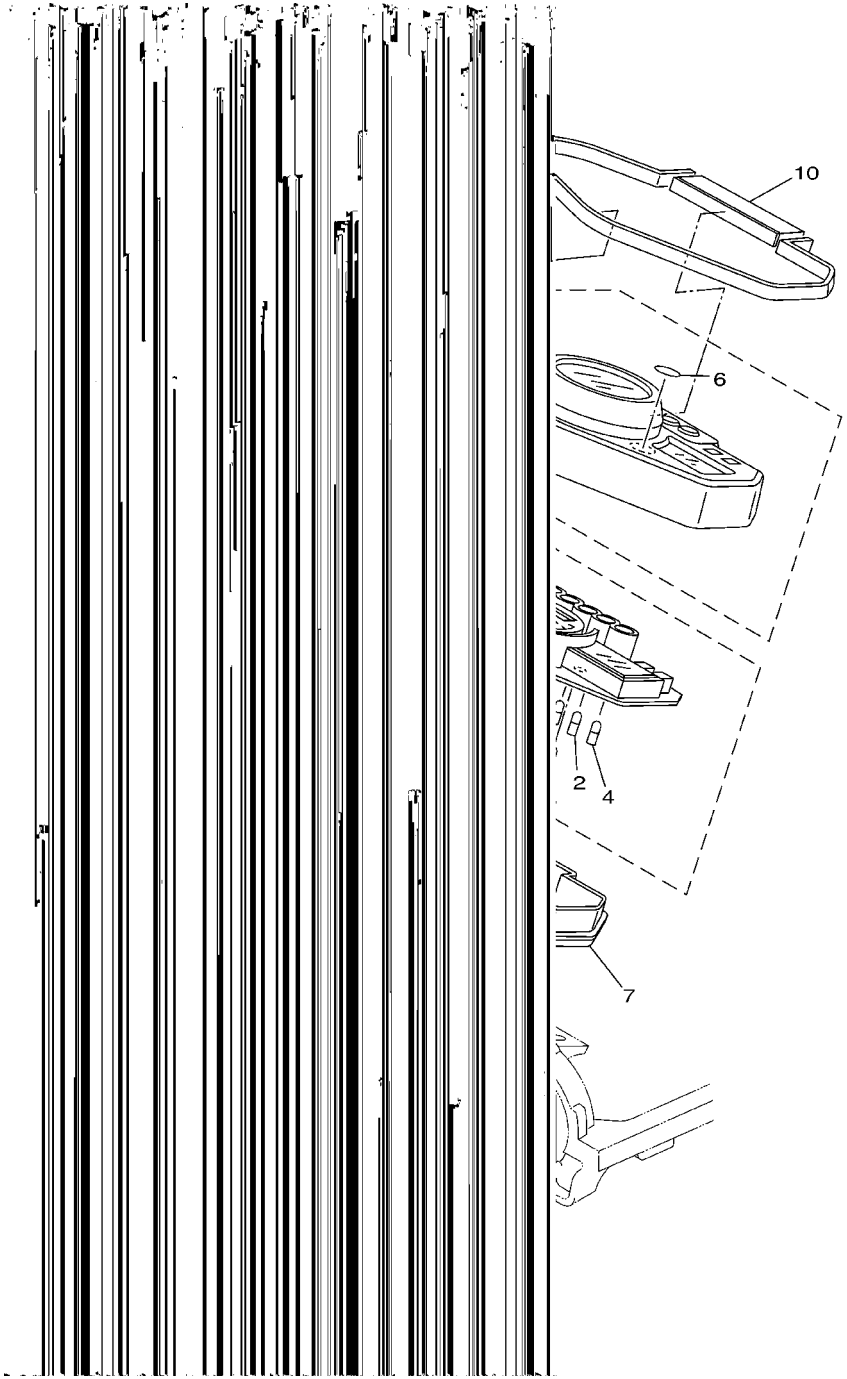

FIG. 40 METER

REF. NO.	PART NO.	DESCRIPTION	5PS1	5PS2				REMARKS
1	5PS–83570–00	SPEEDOMETER ASSY	1	1				UR
	5PS–83570–10	SPEEDOMETER ASSY	1					UR FOR GBR
2	4YR–83517–00	.BULB (12V–1.4W T5)	2	2				HI–BEAM,CHECK ENGINE
3	4YR–83517–10	.BULB (12V–2W T5)	2	2				ILLUMI
4	5PS–83517–00	.BULB (12V–1.2W T5)	3	3				TURN,NEUTRAL
5	5PS–8353E–00	CASE, METER UPPER	2	2				
6	5GT–2836B–00	.TUNING FORK MARK	1	1				
7	5PS–83572–00	CASE, SPEEDOMETER LOWER	1	1				
8	97707–40016	SCREW, TAPPING	8	8				
9	5PS–83523–00	DAMPER	1	1				
10	5PS–83541–00	DAMPER	1	1				
11	5PS–83513–00	DAMPER	3	3				
12	90164–05014	SCREW, TAPPING	3	3				

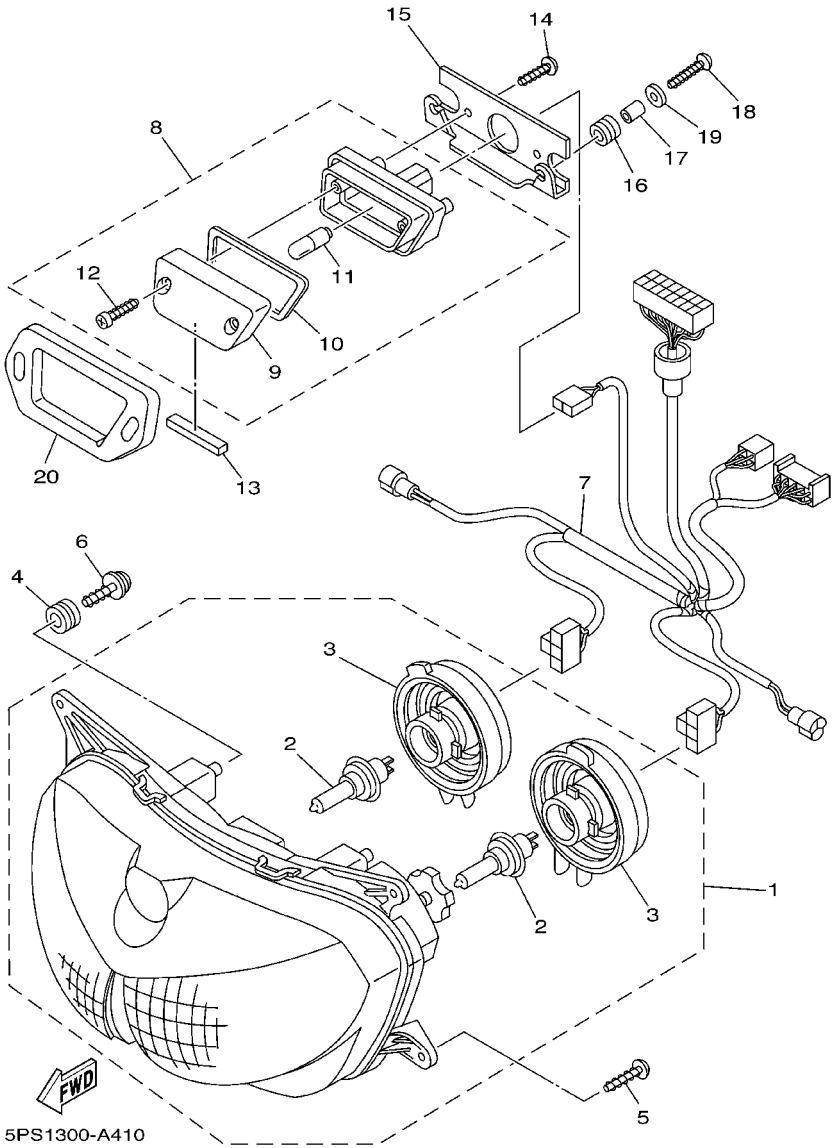

FIG. 41 HEADLIGHT

REF. NO.	PART NO.	DESCRIPTION	5PS1	5PS2				REMARKS
1	5PS-84310-00	HEADLIGHT UNIT ASSY	1					UR
	5PS-84310-10	HEADLIGHT UNIT ASSY	1	1				UR FOR GBR, ZAF, OCE
2	*	.BULB (12V-55W-H7)	2	2				LM HALOGEN
3	4TV-84397-00	.COVER, SOCKET	2	2				
4	5PS-83513-00	DAMPER	4	4				
5	97707-50016	SCREW, TAPPING	4	4				
6	90164-05014	SCREW, TAPPING	4	4				
7	5PS-84359-00	CORD, HEADLIGHT	1	1				
8	3GM-84301-00	PILOT LIGHT ASSY 1	1	1				
9	3GM-84321-00	.LENS ASSY	1	1				
10	3GM-84322-00	.GASKET, LENS	1	1				
11	47G-85353-00	.BULB (12V-5W)	1	1				
12	3GM-84192-10	.SCREW, SPECIAL	2	2				
13	4XV-2834E-00	DAMPER	1	1				
14	90167-05025	SCREW, TAPPING	2	2				
15	4TX-8431R-00	STAY, SETTING	1	1				
16	90480-10517	GROMMET	2	2				
17	90387-052U5	COLLAR	2	2				
18	90167-05037	SCREW, TAPPING	2	2				
19	90201-054K4	WASHER, PLATE	2	2				
20	3GM-84367-50	DAMPER, HEADLIGHT 2	1	1				

FIG. 42 TAILLIGHT

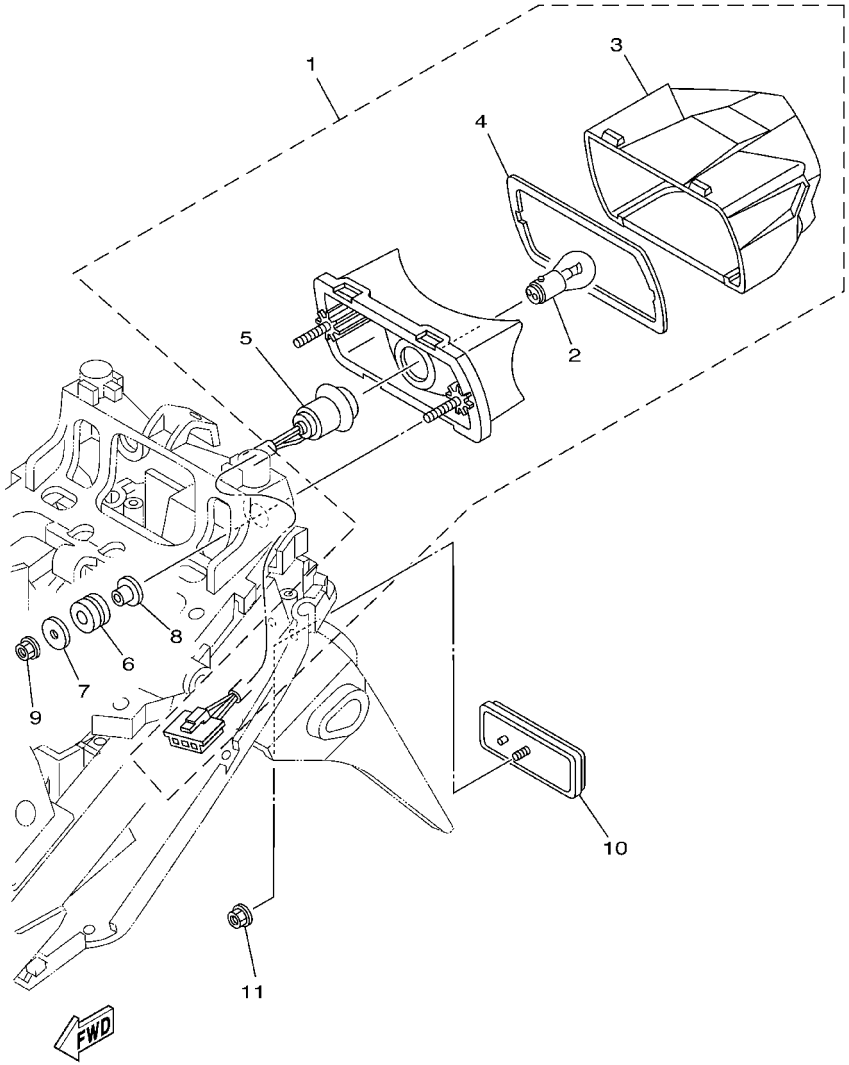

5PS1300-A420

REF. NO.	PART NO.	DESCRIPTION	5PS1	5PS2				REMARKS
1	5PS–84710–00	TAILLIGHT UNIT ASSY	1	1				
2	1A2–84714–41	.BULB (12V–21/5W)	1	1				
3	5PS–84721–00	.LENS, TAILLIGHT	1	1				
4	47X–84723–00	.GASKET, TAIL LENS	1	1				
5	5PS–84735–00	.CORD ASSY	1	1				
6	90480–14323	GROMMET	2	2				
7	90201–06071	WASHER, PLATE	2	2				
8	90387–066Y6	COLLAR	2	2				
9	95307–06600	NUT	2	2				
10	3Y6–85130–02	REAR REFLECTOR ASSY	1	1				
11	95707–05500	NUT, FLANGE	1	1				

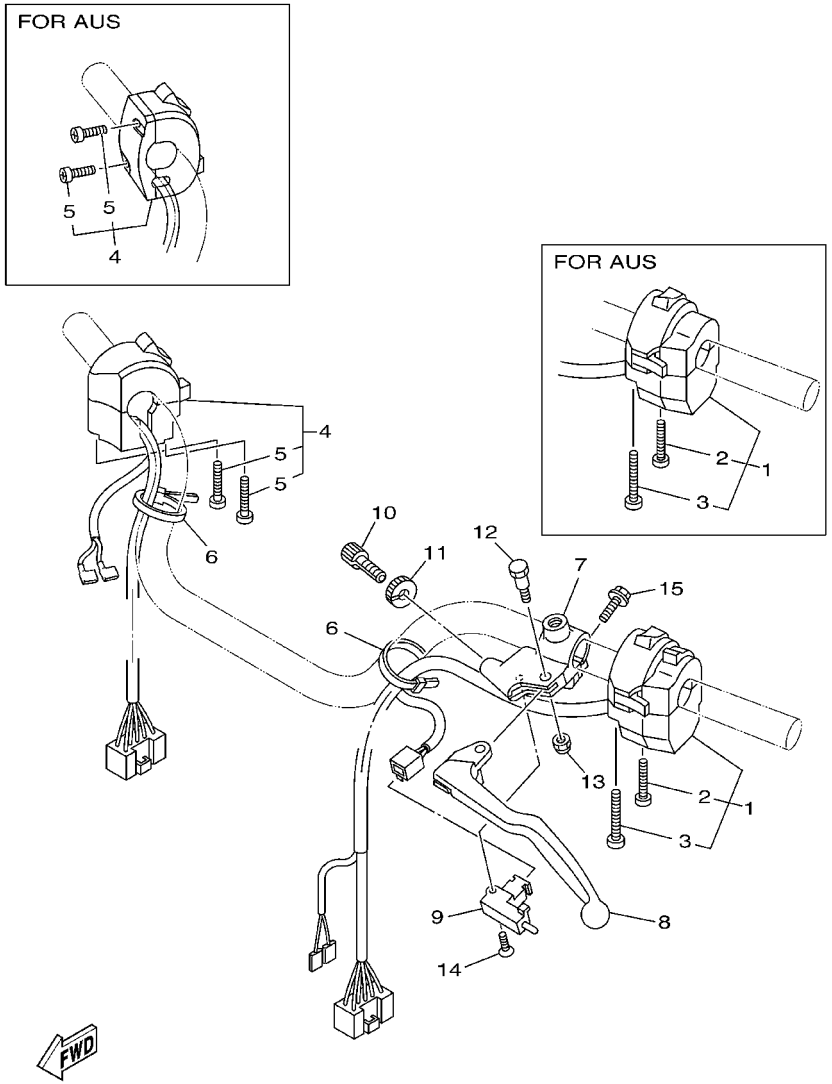

5PS1300-A430

FIG. 43 HANDLE SWITCH. LEVER

REF. NO.	PART NO.	DESCRIPTION	5PS1	5PS2				REMARKS
1	5PS-83969-00	SWITCH, HANDLE 5	1					
	5PS-83972-00	SWITCH, HANDLE 4		1				
2	98507-05030	.SCREW, PAN HEAD	1	1				
3	98507-05040	.SCREW, PAN HEAD	1	1				
4	5PS-83963-00	SWITCH, HANDLE 3 (RIGHT)	1					
	5RT-83975-00	SWITCH, HANDLE 2		1				
5	98507-05045	.SCREW, PAN HEAD	2					
	98507-05022	.SCREW, PAN HEAD		2				
6	437-83936-01	BAND, SWITCH CORD	2	2				
7	3YX-82911-01	HOLDER, LEVER 1	1	1				
8	3YX-83912-00	LEVER 1	1	1				
9	3YX-82917-01	SWITCH	1	1				
10	90123-08096	BOLT	1	1				
11	90179-08148	NUT	1	1				
12	3YX-83945-00	BOLT, LEVER	1	1				
13	95607-06100	NUT, U	1	1				
14	98707-03020	SCREW, FLAT HEAD	1	1				
15	95027-06020	BOLT, FLANGE	1	1				

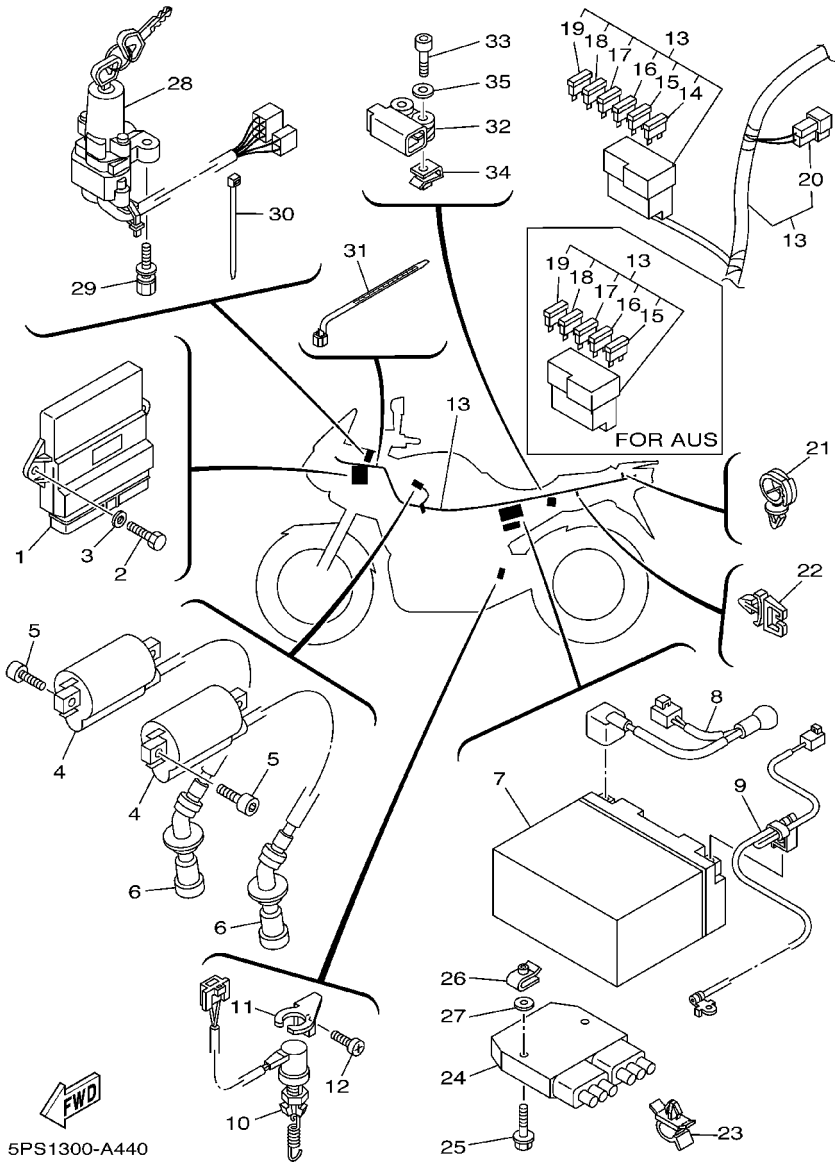

FIG. 44 ELECTRICAL 1

REF. NO.	PART NO.	DESCRIPTION	5PS1	5PS2				REMARKS
1	5PS-8591A-00	ENGINE CONTROL UNIT ASSY	1	1				
2	97024-06016	BOLT	2	2				
3	92904-06600	WASHER	2	2				
4	2UJ-82310-01	IGNITION COIL ASSY	2	2				
5	91317-05016	BOLT	4	4				
6	5JW-82370-00	PLUG CAP ASSY	2	2				
7	4TX-82100-02	BATTERY ASSY (GT12B-4)	1	1				
8	5PS-82115-00	WIRE, PLUS LEAD	1	1				
9	5PS-82116-00	WIRE, MINUS LEAD	1	1				
10	5PS-82530-00	STOP SWITCH ASSY	1	1				
11	5PS-2144G-00	STAY, STOP SWITCH	1	1				
12	98507-06008	SCREW, PAN HEAD	1	1				
13	5PS-82590-00	WIRE HARNESS ASSY	1					
	5PS-82590-10	WIRE HARNESS ASSY		1				
14	5JJ-82151-00	.FUSE (7.5A-BL)	2					
15	5JJ-82151-30	.FUSE (10A-BL)	3	3				
16	5JJ-82151-10	.FUSE (15A-BL)	2	2				
17	5JJ-82151-20	.FUSE (20A-BL)	2	2				
18	5JJ-82151-90	.FUSE (5A-BL)	3	2				
19	5PS-82151-00	.FUSE (40A)	1	1				
20	4WA-81980-00	.DIODE ASSY	1	1				
21	90464-13249	CLAMP	1	1				
22	90464-07M56	CLAMP	1	1				
23	90464-14001	CLAMP	1	1				
24	5JW-81960-00	RECTIFIER & REGULATOR ASSY	1	1				
25	95807-06030	BOLT, FLANGE	2	2				
26	90183-06053	NUT, SPRING	2	2				

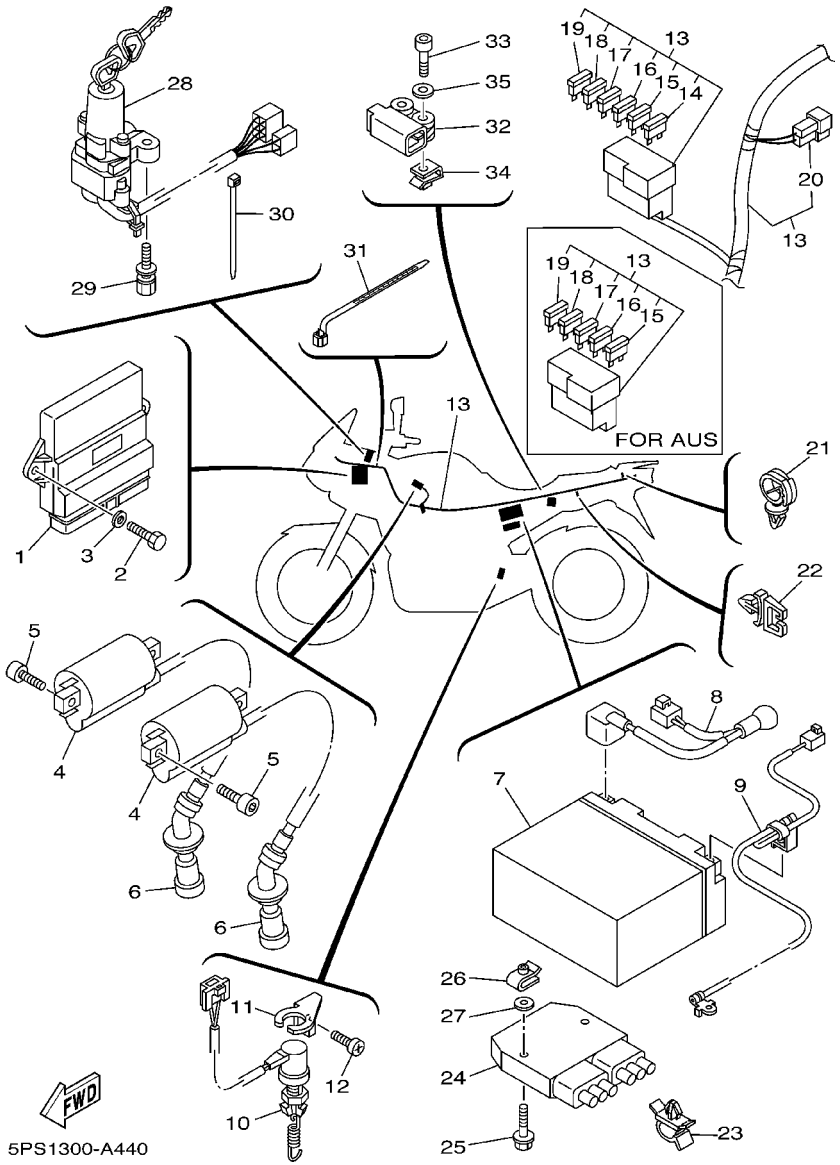

FIG. 44 ELECTRICAL 1

REF. NO.	PART NO.	DESCRIPTION	5PS1	5PS2				REMARKS
27	90202-05187	WASHER, PLATE	2	2				
28	5PS-82501-00	MAIN SWITCH STEERING LOCK	1					
	5PS-82501-10	MAIN SWITCH STEERING LOCK		1				
29	90109-080G5	BOLT	2	2				
30	90465-10098	CLAMP	1	1				
31	90464-25003	CLAMP	1	1				
32	5PS-82576-01	EMERGENCY STOP SWITCH ASSY	1	1				
33	91317-04025	BOLT	2	2				
34	90183-04039	NUT, SPRING	2	2				
35	90201-047A2	WASHER, PLATE	2	2				

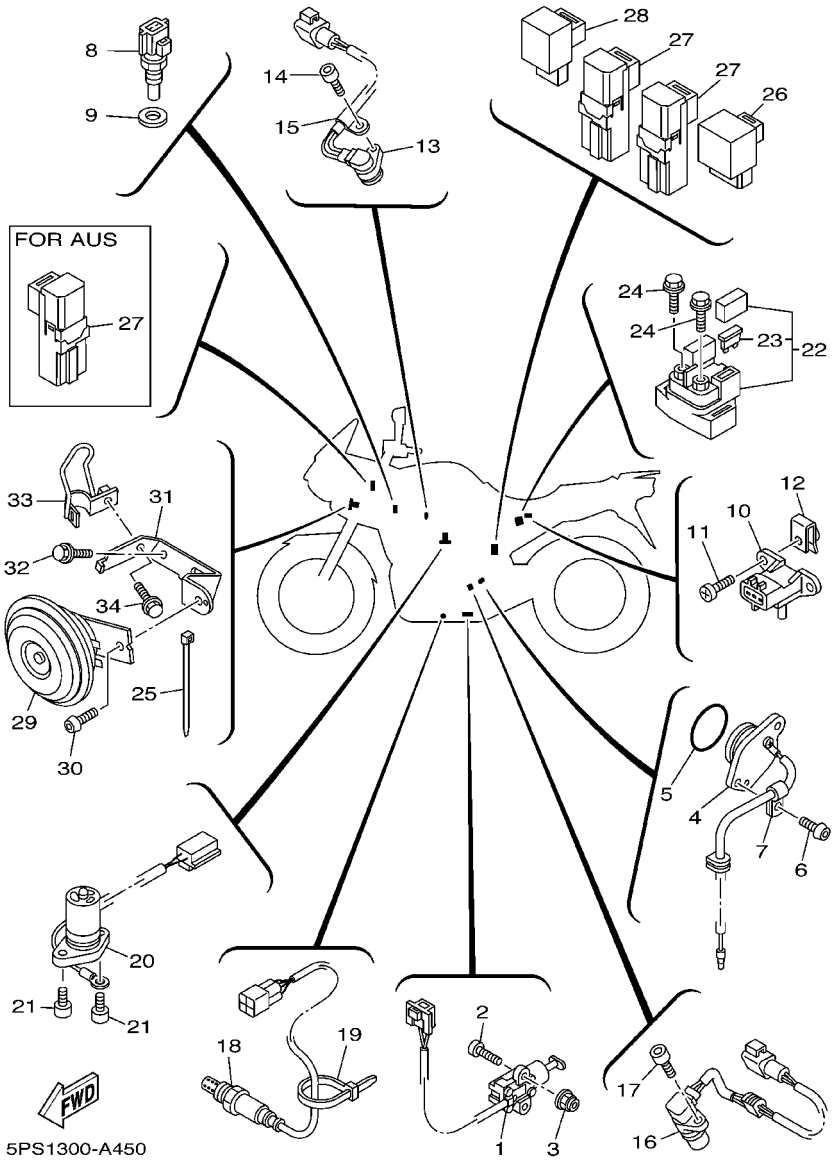

FIG. 45 ELECTRICAL 2

REF. NO.	PART NO.	DESCRIPTION	5PS1	5PS2				REMARKS
1	5RT-82566-60	SWITCH, SIDE STAND	1	1				
2	98507-05020	SCREW, PAN HEAD	2	2				
3	95607-05200	NUT, U FLANGE	2	2				
4	5PS-82540-00	NEUTRAL SWITCH ASSY	1	1				
5	93210-29196	O-RING	1	1				
6	90149-06018	SCREW	2	2				
7	90462-08017	CLAMP	1	1				
8	5PS-85790-00	THERMOSENSOR ASSY	1	1				
9	90430-12202	GASKET	1	1				
10	5PS-82380-00	SENSOR, PRESSURE	1	1				
11	95027-06014	BOLT, FLANGE	2	2				
12	90183-06053	NUT, SPRING	2	2				
13	5PS-85896-00	SENSOR, CAM POSITION	1	1				
14	90110-06124	BOLT, HEXAGON SOCKET HEAD	1	1				
15	90465-08028	CLAMP	1	1				
16	5PS-83755-00	SENSOR, SPEED	1	1				
17	91317-06010	BOLT	1	1				
18	5PS-8592A-00	SENSOR	1	1				
19	90465-10098	CLAMP	1	1				
20	5PS-85720-00	OIL LEVEL GAUGE ASSY	1	1				
21	91317-06012	BOLT	2	2				
22	3EL-81940-10	STARTER RELAY ASSY	1	1				
23	42X-82151-00	.FUSE (10A-BL)	2	2				
24	95027-06008	BOLT, FLANGE	2	2				
25	1UA-82591-00	BAND	2	2				
26	5EA-81950-10	RELAY ASSY	1	1				
27	5EA-81950-20	RELAY ASSY	2	3				

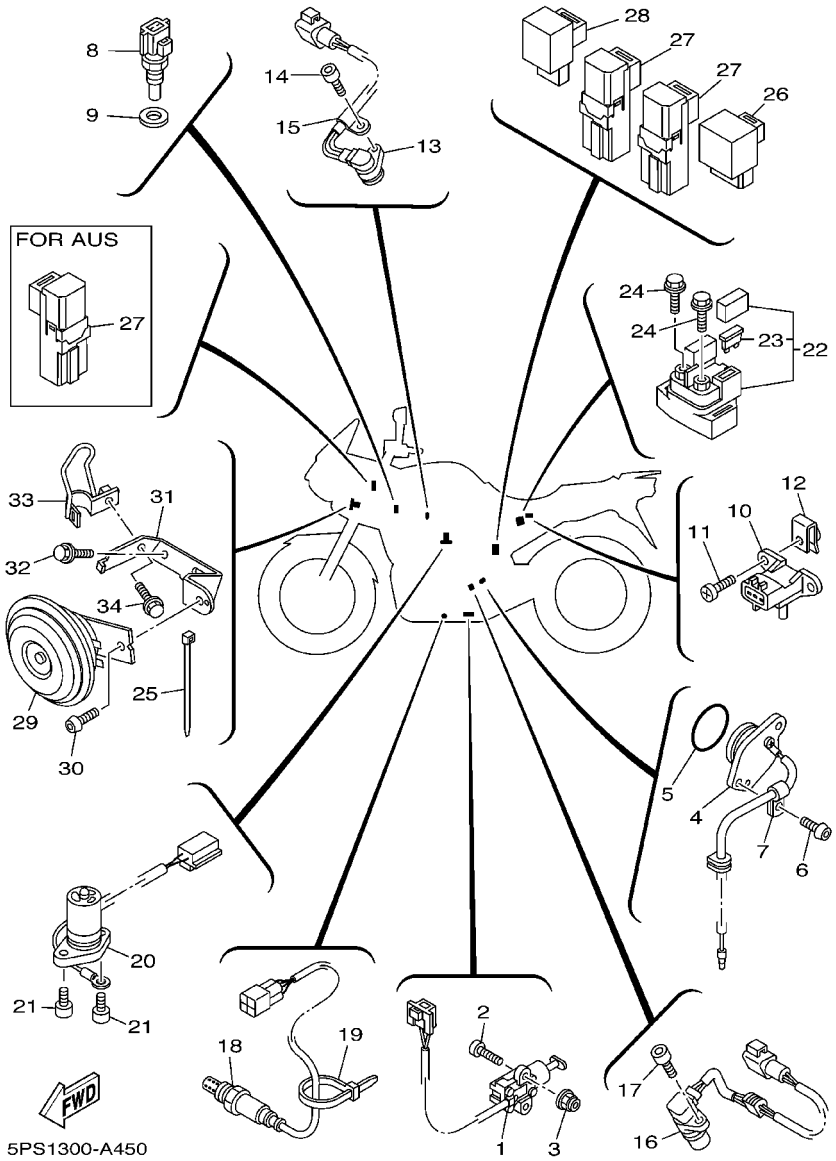

FIG. 45 ELECTRICAL 2

REF. NO.	PART NO.	DESCRIPTION	5PS1	5PS2				REMARKS
28	3XV-83350-21	FLASHER RELAY ASSY	1	1				
29	35J-83371-32	HORN	1	1				
30	92017-06010	BOLT, BUTTON HEAD	1	1				
31	5PS-2317E-00	STAY	1	1				
32	95027-06010	BOLT, FLANGE	2	2				
33	5PS-23378-00	BRACKET, HORN	1	1				
34	95827-06010	BOLT, FLANGE	1	1				

NUMERICAL INDEX

PART NO.	GRID NO.
5DM−W0041−50	E − 9
4BH−W0042−50	E − 12
4SV−W0045−00	E − 4
5PS−W0046−00	E − 7
3GM−W0047−10	E − 4
3MA−W0047−10	E − 4
5JW−W0047−00	E − 7
1J3−W0048−00	E − 4
51L−W0048−00	E − 7
4SV−W0057−00	E − 4
4SV−W0057−10	E − 4
5JW−W0057−00	E − 7
2TV−W2470−00	E − 2
4HM−W2585−01	E − 9
5DM−W2587−00	E − 9
5PS−Y2410−10−01	D − 14
5PS−Y2410−10−02	D − 14
5PS−Y2410−10−04	D − 14
5PS−11101−00	B − 2
4KG−1111G−00	B − 3
583−11126−00	C − 9
3LD−11133−10	B − 2
3LD−11134−10	B − 2
5PS−11165−00	B − 2
5PS−11166−00	C − 2
5PS−11169−00	B − 2
5PS−11181−00	B − 2
5PS−11190−00	B − 2
5PS−11193−00	B − 2
214−11198−01	B − 13
5PS−11311−00	B − 4
5PS−11351−00	B − 4
3LD−11361−00	C − 6
5PS−11400−00	B − 5
3LD−11416−00	B − 5
3LD−11416−10	B − 5
3LD−11416−20	B − 5
3LD−11416−30	B − 5
3LD−11416−40	B − 5
3LD−11416−50	B − 5
3LD−11416−60	B − 5
4NX−11500−00	B − 5
4NX−11510−00	B − 5
3LD−11583−00	B − 5
3LD−11584−00	B − 5
5BE−11603−00	B − 5
5PS−11631−00	B − 5
5PS−11633−00	B − 5

PART NO.	GRID NO.
5PS−11650−00	B − 5
3LD−11654−00	B − 5
3LD−11656−00	B − 5
3LD−11656−10	B − 5
3LD−11656−20	B − 5
3LD−11656−30	B − 5
3LD−12111−01	B − 6
3LD−12112−01	B − 6
3LD−12113−00	B − 6
1WG−12116−00	B − 6
3LD−12117−00	B − 6
3LD−12118−00	B − 6
51Y−12119−00	B − 6
5PS−12121−00	B − 6
1WG−12153−21	B − 6
1WG−12153−31	B − 6
3LD−12168−A0	B − 6
3LD−12168−F0	B − 6
3LD−12168−H1	B − 6
3LD−12168−K1	B − 6
3LD−12168−M1	B − 6
3LD−12168−R1	B − 6
3LD−12168−U1	B − 6
3LD−12168−W1	B − 6
3LD−12168−Y1	B − 6
3LD−12168−00	B − 6
3LD−12168−20	B − 6
3LD−12168−40	B − 6
3LD−12168−60	B − 6
3LD−12168−80	B − 6
3LD−12169−E0	B − 7
3LD−12169−G0	B − 7
3LD−12169−J0	B − 7
3LD−12169−L0	B − 7
3LD−12169−N0	B − 7
3LD−12169−T0	B − 7
3LD−12169−11	B − 6
3LD−12169−31	B − 6
3LD−12169−50	B − 6
3LD−12169−70	B − 7
3LD−12169−90	B − 7
5PS−12171−00	B − 8
3LD−12176−00	B − 8
5PS−12180−00	B − 8
5PS−12210−00	B − 8
5JW−12213−00	B − 8
5BE−12241−00	B − 8
3LD−12247−00	B − 8

PART NO.	GRID NO.
3LD−12251−00	B − 8
5PS−12252−00	B − 8
5PS−12405−00	B − 10
1AE−12410−00	B − 11
4NX−12413−00	B − 11
5PS−12417−00	B − 11
5PS−12420−00	B − 9
5PS−1243A−00	C − 3
5PS−1243E−00	C − 3
1UF−12435−00	B − 10
1KT−12437−00	B − 10
3LD−12439−00	B − 9
5PS−1244E−00	B − 11
5PS−1244F−00	B − 11
3VD−12459−00	B − 9
5PS−12461−00	B − 10
4FL−12462−00	B − 10
5PS−12465−00	B − 10
5PS−12467−00	B − 10
5PS−12469−00	B − 9
3LD−12481−00	B − 9
4NX−12482−00	B − 10
5Y9−12491−00	C − 2
	C − 3
1AA−12535−00	B − 10
5PS−12576−00	B − 10
5PS−12578−00	B − 10
5PS−12579−00	B − 11
5PS−12881−00	C − 3
3LD−13113−00	B − 13
3LD−13151−00	B − 13
5PS−13161−00	B − 12
3LD−13300−00	B − 12
4NX−13303−00	B − 12
5PS−13317−00	B − 14
3VD−13325−00	B − 12
5PS−13329−00	B − 12
3LD−13339−00	B − 12
3LD−13371−00	B − 12
5PS−13411−00	B − 12
3VD−13412−00	B − 12
5PS−13414−00	B − 13
3VD−13415−00	B − 12
3VD−13416−00	B − 13
5PS−13417−00	B − 13
5JX−13440−00	B − 12
5PS−13447−00	B − 12
5PS−13464−00	B − 13

PART NO.	GRID NO.
5PS−13465−00	B − 13
11H−13490−00	B − 13
5PS−13586−00	B − 15
5PS−13750−00	C − 3
5PS−13761−00	C − 3
5PS−13906−00	C − 3
5PS−13907−00	D − 15
5PS−13938−00	C − 3
5PS−13971−00	D − 14
5PS−13972−00	D − 14
5PS−1410H−00	B − 15
5PS−14103−00	C − 4
5JW−14104−00	C − 4
5PS−14148−00	B − 15
8CC−14216−10	C − 3
5PS−14264−00	B − 15
5FL−14348−00	C − 4
5FL−14348−10	C − 4
5PS−14349−01	C − 3
5PS−14411−00	B − 15
5PS−14414−00	B − 15
5PS−14419−00	B − 15
5PS−14421−00	B − 15
5PS−1443E−00	C − 2
5PS−14435−00	B − 15
5PS−14451−00	B − 15
5PS−14452−00	B − 15
5PS−14453−00	B − 15
5PS−1446E−00	B − 15
5PS−14463−00	B − 15
5PS−14545−00	B − 15
5PS−14552−00	B − 15
5PS−14568−00	C − 2
5JW−14589−00	C − 3
5PS−14610−00	C − 5
3VD−14613−00	C − 5
5PS−14628−00	C − 5
5PS−14710−00	C − 5
5PS−14715−00	C − 5
5PS−14720−00	C − 5
5PS−14725−00	C − 5
5PS−14738−00	C − 5
5PS−14748−00	C − 5
5PX−14755−00	C − 5
5PS−1482K−00	B − 2
5PS−14834−00	C − 2
5PS−14840−00	C − 2
5PS−14881−00	C − 2

PART NO.	GRID NO.
5PS−14882−00	C − 2
5PS−14890−00	B − 2
5PS−14899−00	B − 2
5DM−14936−00	C − 3
5PS−14987−00	C − 3
5PS−14996−00	C − 3
5PS−15100−00	C − 6
3LD−15118−00	C − 7
4G0−15138−00	C − 6
4H7−15138−00	B − 13
4XV−15138−00	C − 6
5PS−15163−00	C − 13
3LD−15191−00	C − 6
5PS−15316−00	C − 8
5PS−15326−00	C − 8
5PS−15335−00	C − 8
5PS−15337−00	C − 8
5PS−1541E−00	C − 8
5PS−15411−00	C − 8
5PS−15416−00	C − 7
5PS−15419−00	C − 8
5PS−15420−00	C − 8
5PS−15425−00	C − 9
5PS−15427−00	C − 8
5PS−15431−00	C − 8
5PS−15441−00	C − 9
5PS−15451−00	C − 8
5PS−15456−00	C − 7
5PS−15462−00	C − 9
5PS−15463−00	C − 9
3LD−15512−00	C − 10
5PS−15515−00	C − 10
3LD−15517−00	C − 10
26H−15521−00	C − 10
3LD−15590−02	C − 10
4TX−16150−02	C − 11
3VD−16154−00	C − 12
4H7−16154−00	C − 11
3VD−16164−00	C − 12
4NX−16181−00	C − 12
4H7−16321−02	C − 11
4TX−16321−00	C − 11
168−16324−00	C − 11
3J2−16324−00	C − 11
168−16325−00	C − 11
5PS−16340−00	C − 11
5EB−16351−01	C − 11
5PS−16356−00	C − 11

PART NO.	GRID NO.
4TX−16371−00	C − 11
5PS−16382−00	C − 11
5PS−17121−00	C − 13
5PS−17131−00	C − 13
5PS−17151−00	C − 13
5PS−17161−00	C − 13
5PS−17211−00	C − 14
5PS−17221−00	C − 13
5PS−17231−00	C − 13
5PS−17241−00	C − 13
5PS−17251−00	C − 14
5PS−17261−00	C − 13
5PS−17401−00	C − 13
5PS−17402−00	C − 13
278−17424−01	C − 14
5PS−17446−00	C − 14
5PS−17460−00	C − 14
5PS−17471−00	C − 14
5PS−17653−00	C − 8
5PS−18101−00	D − 2
5PS−18110−00	D − 2
5EB−18113−00	D − 2
2H9−18115−00	D − 2
5PS−18116−00	D − 2
4XV−18127−00	D − 2
5PS−18130−00	D − 2
4SV−18140−00	C − 15
2H9−18154−00	D − 2
4NX−18175−00	C − 15
5PS−18511−00	C − 15
5PS−18512−00	C − 15
5PS−18513−00	C − 15
4XV−18531−00	C − 15
5PS−18531−00	C − 15
3LD−18536−00	C − 15
5PS−18540−00	C − 15
4UN−18542−00	C − 15
4UN−18566−00	C − 15
5PS−21110−00	D − 3
5PS−21110−10	D − 3
5PS−2117E−00	D − 5
5PS−2117K−00	E − 2
5PS−2117M−00	D − 3
5PS−2117V−00	D − 3
5PS−2117W−00	D − 3
5PS−21190−00	D − 3
5PS−21228−00	E − 12
5BM−21268−00	B − 14

NUMERICAL INDEX

PART NO.	GRID NO.
5PS−2132F−00	D − 6
4XV−21376−00	D − 5
5PS−2139E−00	D − 6
5PS−2139X−00	D − 15
5PS−2144G−00	F − 10
5PS−21489−00	D − 3
4X7−2149Y−00	C − 2
5EB−21495−00	D − 3
5PS−21511−00−P0	D − 4
5PS−21511−00−P1	D − 4
5PS−21511−00−P2	D − 4
4NX−21541−00	D − 13
5PS−21611−00	D − 4
5PS−2162A−00	D − 4
5PS−2163A−00	D − 4
5PS−21639−00	D − 4
51Y−21639−00	D − 5
5JW−21647−01	D − 4
5PS−21649−00	D − 5
5PS−21650−00	D − 9
5PS−21651−00−P0	D − 5
5PS−21651−00−P1	D − 5
5PS−21651−00−4B	D − 5
5BM−21652−00	B − 14
5PS−21654−00	D − 5
5PS−21654−10	D − 6
5PS−21711−00	D − 7
1J7−21717−00	D − 7
15A−21717−00	E − 15
4TX−21717−00	E − 14
	E − 15
	F − 2
5PS−21721−00	D − 7
5PS−21750−00	B − 14
5PS−21761−00	B − 14
5PS−2178A−00	E − 14
	E − 15
5PS−21816−00	D − 7
26H−21828−00	D − 7
5PS−21871−00	D − 7
5EB−21875−00	D − 7
5PS−22110−00	D − 8
5EB−22123−00	D − 8
5PS−22125−00	D − 8
5EB−22127−00	D − 8
3FV−22128−00	D − 8
5PS−22141−00	D − 8
5PS−22151−00	D − 9

PART NO.	GRID NO.
5PS−2217A−00	D − 8
5PS−2217M−00	D − 8
5PS−22184−00	D − 8
5PS−22210−00	D − 10
4GY−22216−20	D − 10
5PS−22219−00	D − 10
5PS−23102−00	D − 12
5PS−23103−00	D − 12
5PS−23110−00	D − 12
5PS−23111−00	D − 12
	D − 13
5EA−23118−10	D − 12
	D − 13
4KM−23123−01	D − 11
3GM−23125−00	D − 12
5PS−23126−00	D − 12
5PS−23136−00	D − 12
5PS−23141−00	D − 12
	D − 13
4PU−23144−00	D − 12
	D − 13
4PU−23145−01	D − 12
4V4−23146−L0	D − 12
3FV−23149−00	D − 12
	D − 13
3LR−23149−00	D − 12
	D − 13
4V4−23153−L0	D − 12
509−23158−L0	D − 12
	D − 13
5PS−2317E−00	F − 13
5PS−23170−00	D − 12
3GM−23171−00	D − 12
5PS−23173−00	D − 12
	D − 13
278−23181−50	D − 12
	D − 13
4PU−2331G−00	D − 13
5PS−23340−00	D − 13
5PS−23378−00	F − 13
5PS−23389−00	D − 11
4XV−23415−01	D − 11
4XV−23418−00	D − 11
5PS−23435−00	D − 11
4H7−23441−00−P2	D − 11
3FV−23462−00	D − 11
5PS−2414H−00	D − 15
5PS−24181−00	D − 14

PART NO.	GRID NO.
5PS−24181−10	D − 14
5EB−24183−00	D − 14
5PS−24183−00	D − 14
5PS−24186−00	D − 14
5JX−24188−00	B − 14
5PS−24191−00	D − 14
5PS−24192−00	D − 14
5JW−24311−00	C − 4
5PS−24318−00	D − 15
68V−24376−00	C − 3
5JW−24486−00	D − 14
5JW−24491−00	D − 14
5JJ−24602−00	D − 14
5PS−2470F−00	E − 2
5PS−2471K−00−P0	D − 4
5PS−2471K−00−P1	D − 5
5PS−2471K−00−4B	D − 4
5PS−2472K−00−P0	D − 5
5PS−2472K−00−P1	D − 5
5PS−2472K−00−4B	D − 5
5PS−24723−00	D − 5
5PS−24723−10	D − 5
5PS−24724−00	D − 5
5PS−24724−10	D − 5
4HM−24728−00	E − 2
5PS−24730−00	E − 2
5LV−24737−00	E − 2
22W−24741−00	E − 2
5PS−24741−00	E − 2
5PS−24746−00	E − 2
5JJ−2475X−01	E − 2
5PS−24773−00	D − 5
5PS−2478E−00	E − 2
4BP−24780−00	E − 2
5PS−24792−00	E − 2
4XV−25117−00	E − 3
5PS−25168−00−33	E − 3
4XV−25181−00	E − 3
5PS−25317−00	E − 5
5PS−25338−00−33	E − 5
5EA−25364−00	E − 5
5PS−25366−00	E − 5
5PS−25376−00	E − 5
4FM−25377−00	E − 5
5EB−25377−00	E − 6
4FM−25381−10	E − 5
5EB−25388−00	E − 5
5PS−25389−00	E − 5

PART NO.	GRID NO.
5MT−25398−00	E − 3
	E − 5
5MT−25398−10	E − 3
	E − 5
5MT−25398−20	E − 3
	E − 5
5PS−25442−00	E − 5
5DM−2580T−00	E − 4
5DM−2580U−00	E − 4
5PS−2580W−00	E − 7
5PX−2581T−00	E − 4
4BP−2582A−00	E − 12
4JH−2582W−00	E − 7
5GJ−25827−00	E − 7
4BH−2583V−00	E − 12
4BP−2585F−00	E − 12
3LN−2585G−00	E − 12
2KF−25852−50	E − 12
360−25854−01	E − 12
4HM−25854−00	E − 9
2GU−25855−00	E − 12
4HM−25867−00	E − 9
5PS−25872−00	E − 9
5PS−25874−00	E − 13
5PS−25875−00	D − 9
2R8−25876−01	E − 9
4NK−25876−00	D − 9
3FV−2589F−00	E − 9
31A−25894−01	E − 12
5PS−25895−00	E − 12
5JW−25914−10	E − 7
4SV−25919−00	E − 4
5JW−25919−00	E − 7
4SV−25924−00	E − 4
3GM−25925−00	E − 4
4TT−25937−00	E − 7
5PS−26111−00	E − 8
5PS−26240−00	E − 8
5JW−26241−00	E − 8
51J−26246−01	E − 8
4TX−26280−41	E − 8
4KG−26281−00	E − 8
3XW−26282−01	E − 8
4TX−26290−41	E − 8
5PS−26302−00	E − 8
5PS−26335−00	E − 8
1E6−26342−00	E − 8
128−27114−00	E − 10

PART NO.	GRID NO.
5PS−27211−00	E − 12
5PS−27212−00	E − 12
47X−27222−00	E − 12
5PS−27311−00	E − 10
5JJ−27315−00	E − 10
5PS−27321−00	E − 10
5PS−27323−00	E − 10
5PS−27352−00	E − 10
3YX−27413−00	E − 10
	E − 11
36Y−27414−00	C − 5
5LV−27431−01	E − 11
5JW−27434−00	D − 2
5JJ−27437−00	E − 11
5LV−27441−01	E − 11
5PS−27442−00	E − 11
5PS−27443−00	E − 11
4BH−27451−01	E − 10
4BH−27461−01	E − 10
5PS−28100−00	D − 5
3TB−28217−00	D − 7
5PS−28217−00	D − 15
	E − 14
5PS−28321−00	F − 2
5PS−28331−00	E − 15
5PS−28332−00	E − 14
5PS−28336−00	E − 14
1AE−2834E−00	D − 4
4XV−2834E−00	F − 7
5PS−28345−00	E − 14
5PS−2835G−00−P0	E − 14
5PS−2835G−00−P1	E − 14
5PS−2835G−00−4B	E − 14
5PS−2835U−00−P0	E − 15
5PS−2835U−00−P1	E − 15
5PS−2835U−00−P2	E − 15
5PS−2835V−00−P0	E − 15
5PS−2835V−00−P1	E − 15
5PS−2835V−00−P2	E − 15
5PS−28356−00	E − 14
5PS−28357−00	F − 2
5PS−2836A−00	F − 2
5GT−2836B−00	F − 6
5LV−2836B−01	F − 2
5PS−2836E−00	F − 2
5PS−2836K−00	E − 14
5PS−2837N−00	E − 15
5PS−2837R−00	E − 15

PART NO.	GRID NO.
5PS−28372−00	D − 15
5PS−28373−00	E − 14
5PS−28381−00	E − 14
5PS−28391−00	F − 2
5PS−28391−10	F − 2
5PS−28391−20	F − 2
5PS−28392−00	F − 2
5PS−28392−10	F − 2
5PS−28392−20	F − 2
5PS−28396−00	E − 15
5PS−28397−00	E − 15
5PS−81410−00	F − 3
5PS−81450−00	F − 3
3AJ−81801−00	F − 4
3AJ−81809−00	F − 4
1HX−81815−00	F − 4
4XV−8182A−00	F − 4
3AJ−81826−00	F − 4
3AJ−81830−00	F − 4
11H−81844−00	F − 4
1FK−81847−00	F − 4
4G0−81871−00	F − 4
3LD−81890−00	F − 4
3EL−81940−10	F − 12
5EA−81950−10	F − 12
5EA−81950−20	F − 12
5JW−81960−00	F − 10
4WA−81980−00	F − 10
4TX−82100−02	F − 10
5PS−82115−00	F − 10
5PS−82116−00	F − 10
3VD−82131−00	D − 4
42X−82151−00	F − 12
5JJ−82151−00	F − 10
5JJ−82151−10	F − 10
5JJ−82151−20	F − 10
5JJ−82151−30	F − 10
5JJ−82151−90	F − 10
5PS−82151−00	F − 10
2UJ−82310−01	F − 10
5JW−82370−00	F − 10
5PS−82380−00	C − 3
	F − 12
5PS−82386−00	B − 15
5PS−82501−00	F − 11
5PS−82501−10	F − 11
5PS−82509−00	C − 3
5PS−82530−00	F − 10

NUMERICAL INDEX

PART NO.	GRID NO.
5PS−82540−00	F − 12
5RT−82566−60	F − 12
5PS−82576−01	F − 11
5PS−82590−00	F − 10
5PS−82590−10	F − 10
1UA−82591−00	E − 9
	F − 12
3YX−82911−01	F − 9
3YX−82917−01	F − 9
5PS−83310−00	F − 5
1KH−83311−00	F − 5
5PW−83318−00	F − 5
5PS−83320−00	F − 5
5PW−8333A−00	F − 5
5PS−83330−00	F − 5
5PW−8334A−00	F − 5
5PS−83340−00	F − 5
3XV−83350−21	F − 13
35J−83371−32	F − 13
5PS−8338L−00	C − 9
5PS−83513−00	F − 6
	F − 7
4YR−83517−00	F − 6
4YR−83517−10	F − 6
5PS−83517−00	F − 6
5PS−83523−00	F − 6
5PS−8353E−00	F − 6
5PS−83541−00	F − 6
5PS−83570−00	F − 6
5PS−83570−10	F − 6
5PS−83572−00	F − 6
4BH−83591−00	B − 15
5PS−83755−00	F − 12
3YX−83912−00	F − 9
5EB−83922−01	E − 9
437−83936−01	F − 9
3YX−83945−00	F − 9
5PS−83963−00	F − 9
5PS−83969−00	F − 9
5PS−83972−00	F − 9
5RT−83975−00	F − 9
4HM−83980−00	E − 9
5PS−84163−00	E − 14
3GM−84192−10	F − 7
3GM−84301−00	F − 7
4TX−8431R−00	F − 7
5PS−84310−00	F − 7
5PS−84310−10	F − 7

PART NO.	GRID NO.
3GM−84321−00	F − 7
3GM−84322−00	F − 7
5PS−84359−00	F − 7
3GM−84367−50	F − 7
4TV−84397−00	F − 7
5PS−84710−00	F − 8
1A2−84714−41	F − 8
5PS−84721−00	F − 8
47X−84723−00	F − 8
5PS−84735−00	F − 8
3Y6−85130−02	F − 8
47G−85353−00	F − 7
5PS−85720−00	F − 12
5PS−85790−00	F − 12
5PS−85885−00	C − 3
5PS−85896−00	F − 12
5PS−8591A−00	F − 10
5PS−8592A−00	F − 12
90101−08662	E − 10
90101−08766	E − 5
90101−10659	D − 9
90101−12749	D − 8
90105−06020	D − 4
90105−06153	B − 2
90105−07342	B − 8
90105−08047	D − 3
90105−08386	E − 7
90105−10032	D − 3
90105−10113	D − 3
90105−10323	D − 8
90105−10402	D − 10
90105−105A7	E − 4
90105−10560	C − 6
90105−12584	B − 5
90109−06044	B − 3
90109−06045	B − 3
90109−06046	D − 6
90109−06056	B − 14
90109−064G6	E − 4
90109−065A8	C − 8
90109−066F0	B − 2
90109−080G5	F − 11
90109−08044	C − 5
90109−082F5	E − 10
90109−083E2	E − 10
90109−083G4	E − 7
90109−087F1	C − 5
90110−05011	F − 3

PART NO.	GRID NO.
90110−05014	D − 14
90110−05112	D − 15
90110−05201	E − 15
90110−06018	B − 12
	B − 13
	B − 14
90110−06027	C − 15
90110−06042	F − 3
90110−06060	C − 15
90110−06093	B − 13
90110−06124	F − 12
90110−06200	D − 4
90110−06226	E − 10
90110−08220	E − 11
90111−06037	B − 10
90111−08005	D − 5
90111−08006	D − 5
90111−12001	D − 3
90116−10575	E − 5
90119−05062	D − 4
90119−06044	B − 10
	E − 12
	E − 14
90119−06096	D − 9
90119−06108	D − 4
90119−06117	D − 7
	D − 9
90119−06118	D − 4
90119−06214	C − 2
90119−06228	D − 11
90123−08096	F − 9
90149−05009	B − 2
	C − 9
90149−05299	E − 15
90149−05321	C − 15
90149−06018	F − 12
90149−06026	C − 10
90149−10002	D − 3
90150−05024	E − 14
90151−06008	C − 6
90151−06011	C − 13
90153−06029	B − 4
90157−05079	E − 10
90157−05134	E − 11
90159−06033	D − 7
90159−06123	C − 11
90164−05014	F − 6
	F − 7

PART NO.	GRID NO.
90167−05025	F − 7
90167−05037	F − 7
90167−05076	E − 14
90167−05080	E − 14
90170−06183	E − 2
90170−06228	D − 2
90170−20008	C − 11
90176−28083	D − 11
90179−05523	E − 14
	E − 15
90179−06009	D − 4
90179−06635	E − 2
90179−08148	F − 9
90179−08410	C − 5
90179−09379	B − 5
90179−10002	D − 3
90179−10414	B − 2
90179−10696	D − 3
90179−22003	C − 14
90179−30691	D − 11
90183−04039	F − 11
90183−05042	E − 14
	E − 15
90183−05061	E − 14
90183−06023	E − 12
90183−06053	F − 10
	F − 12
90185−12119	D − 8
90185−18167	D − 8
90185−24165	E − 5
90201−04018	D − 4
90201−047A2	F − 11
90201−054K4	F − 7
90201−06043	D − 6
90201−06071	B − 10
	F − 8
90201−066F0	C − 6
90201−080H1	D − 2
90201−08083	E − 12
90201−08087	C − 6
90201−081R9	E − 10
90201−08753	C − 5
90201−10N12	C − 14
90201−101J1	D − 9
	D − 10
90201−10118	E − 9
	E − 13
90201−10119	C − 12

PART NO.	GRID NO.
90201−103M4	B − 2
90201−11597	C − 6
90201−12013	D − 2
90201−121H0	B − 5
90201−12163	C − 11
90201−12575	D − 2
90201−127E1	B − 9
90201−14215	E − 12
90201−186M4	D − 8
90201−191J4	D − 2
90201−20008	C − 14
90201−25M72	C − 14
90201−257R5	E − 5
90201−281U8	D − 11
90201−30008	C − 10
90202−05187	F − 11
90202−05224	E − 14
	E − 15
90202−06170	D − 4
90202−30235	D − 11
90206−08051	D − 6
90206−12074	D − 2
90209−21332	C − 13
90209−21351	C − 13
90209−22352	C − 13
90209−28330	C − 13
90209−28331	C − 13
90209−29329	C − 13
90215−20004	C − 11
90215−30233	C − 14
90240−08013	E − 12
90240−08084	E − 10
90267−40110	D − 4
90269−06081	D − 5
90269−07001	D − 3
90269−07077	F − 2
90269−08001	D − 9
90280−05029	B − 5
90338−06018	E − 2
90338−08008	D − 3
90338−08163	D − 5
	D − 11
90338−08226	D − 4
90338−10132	E − 15
90338−10150	B − 2
90338−24112	D − 3
90340−14128	C − 9
90340−14132	B − 13

PART NO.	GRID NO.
90340−18101	B − 2
90340−32123	C − 9
90383−14001	E − 11
90387−052U5	F − 7
90387−06014	E − 11
90387−0602Y	D − 14
90387−06048	D − 5
90387−061W6	D − 14
90387−0614M	B − 10
90387−06372	D − 9
90387−065T2	D − 4
90387−066Y6	F − 8
90387−06761	B − 14
90387−0714B	B − 10
90387−085N0	B − 14
90387−1012B	D − 8
90387−106W6	B − 13
	B − 14
90387−120W5	B − 12
90387−126Y1	D − 8
90387−127W0	D − 9
90387−130W6	B − 14
90387−14003	D − 3
90387−2200T	E − 3
90387−25004	C − 13
90387−2511A	C − 14
90387−2513E	C − 13
90387−2802W	C − 13
90387−32003	C − 13
90401−10002	B − 12
90401−10159	E − 9
90401−10172	E − 9
	E − 13
90430−06014	B − 4
	B − 9
90430−08119	B − 2
90430−09002	C − 3
90430−10188	B − 12
	B − 13
90430−12202	B − 15
	F − 12
90430−14131	B − 12
90445−08010	B − 15
90445−08012	C − 2
90445−083J5	D − 7
90445−11026	B − 14
90445−116H6	C − 2
90445−197J2	E − 10

NUMERICAL INDEX

PART NO.	GRID NO.
90450−25037	B − 13
90450−32015	B − 10
90450−38040	B − 10
90450−52602	C − 2
90450−63001	B − 15
90462−05005	B − 15
90462−08017	F − 12
90464−07M56	F − 10
90464−07209	E − 14
90464−10233	D − 7
90464−12089	D − 3
90464−13249	D − 3
	F − 10
90464−14001	F − 10
90464−15157	D − 7
90464−15195	E − 15
90464−16005	D − 14
90464−16007	D − 14
90464−18002	D − 4
	D − 9
90464−20181	D − 3
90464−25003	F − 11
90464−35132	E − 14
90465−08028	F − 12
90465−08034	C − 8
90465−08125	C − 8
90465−08380	F − 3
90465−10028	C − 6
90465−10098	C − 2
	E − 14
	E − 15
	F − 11
	F − 12
90467−08075	D − 7
90467−09006	D − 15
90467−09037	C − 3
90467−10008	B − 14
90467−10038	B − 10
90467−11019	D − 7
90467−11090	C − 3
90467−11106	C − 2
90467−12003	D − 14
90467−14015	C − 2
90467−14057	E − 12
90467−17003	C − 2
90467−20086	C − 2
90468−08104	C − 2
90480−01558	D − 7

PART NO.	GRID NO.
90480−10517	F − 7
90480−14323	F − 8
90480−15363	B − 10
90480−20566	D − 7
90501−06022	C − 15
90501−064L1	C − 15
90501−104F9	B − 13
90501−15001	E − 11
90501−230E4	C − 11
90506−20008	E − 10
90506−20223	E − 12
90508−14012	C − 11
90508−20572	E − 10
90508−29016	C − 15
90508−32682	D − 2
91314−06016	B − 9
91314−06020	B − 8
	B − 9
	B − 12
	B − 13
	C − 7
91314−06025	B − 13
	C − 8
	C − 9
91314−06030	B − 9
	B − 12
	C − 9
91314−06035	B − 13
91314−06040	B − 12
	E − 11
91314−06045	B − 9
91314−06050	C − 8
91314−06060	B − 9
91314−08030	D − 11
91314−08040	D − 13
91316−06020	E − 9
91317−04025	F − 11
91317−05010	D − 15
91317−05016	F − 10
91317−05035	E − 8
91317−06010	C − 8
	F − 12
91317−06012	F − 12
91317−06014	C − 8
91317−06016	B − 10
91317−06020	B − 15
	C − 8
91317−06025	B − 10

PART NO.	GRID NO.
91317−06030	C − 8
91317−06045	C − 9
91317−06150	B − 2
91317−08025	D − 13
91380−06010	C − 5
91380−06035	C − 9
91401−20012	E − 12
91401−25015	E − 10
91808−16023	B − 2
92014−06020	D − 4
92014−06025	E − 12
92014−08030	E − 12
92017−06010	D − 14
	F − 13
92017−06014	D − 5
92017−06025	D − 14
92501−06014	C − 3
92902−04100	E − 9
92902−04600	E − 9
92904−06600	F − 10
92907−05600	B − 10
92907−08600	C − 11
92907−12600	D − 8
92990−06600	E − 12
93101−12004	D − 2
93102−12106	C − 11
93102−40008	C − 14
93106−15034	C − 8
93106−28043	E − 3
93106−35042	E − 5
93106−40041	E − 5
93109−12075	C − 8
93109−17071	D − 8
93109−33049	D − 8
93210−07135	B − 14
93210−10096	B − 13
	B − 14
93210−12790	B − 13
	B − 14
93210−13657	B − 13
93210−14369	C − 9
93210−15566	B − 14
93210−18417	B − 10
93210−21190	B − 9
	B − 14
93210−29196	F − 12
93210−30660	B − 5
93210−32172	C − 9

PART NO.	GRID NO.
93210−33133	B − 9
93210−357A2	B − 9
93210−49046	B − 11
93210−64297	B − 12
93306−00304	C − 11
93306−00420	E − 3
93306−07806	E − 5
93306−20455	C − 14
93306−20464	C − 13
93306−20644	E − 5
93306−30534	C − 13
93310−365B8	C − 12
93315−42523	D − 8
93315−42536	D − 8
93317−11020	C − 11
93317−11287	C − 11
93317−21288	C − 8
93317−21746	D − 8
93317−31771	D − 8
93399−99932	D − 11
93440−10109	B − 2
93440−25084	C − 13
93440−31183	C − 13
93440−45144	C − 14
93450−22146	B − 5
93501−04011	E − 11
93505−08030	B − 13
93900−00030	E − 3
	E − 5
94112−18019	E − 3
94116−17008	E − 5
94581−46118	E − 5
94591−40138	B − 8
94701−00241	B − 2
94701−00242	B − 2
95024−06012	B − 9
	C − 5
95024−08012	B − 2
95024−08025	C − 5
95024−10040	B − 13
95027−06008	F − 12
95027−06010	B − 11
	B − 15
	C − 2
	E − 10
	F − 13
95027−06014	F − 12
95027−06016	D − 9

PART NO.	GRID NO.
95027−06020	B − 2
	B − 11
	B − 12
	E − 9
	F − 9
95027−06025	B − 11
	B − 12
95027−06090	D − 14
95304−06700	D − 2
95307−06600	F − 8
95307−08600	E − 5
95307−08700	E − 12
95307−10700	C − 14
95604−06200	E − 11
95606−06100	E − 9
95607−05200	F − 12
95607−06100	F − 9
95607−10200	D − 8
	E − 5
95607−14200	D − 10
95617−08625	B − 2
95617−10100	D − 9
	D − 10
95707−05500	F − 8
95707−06500	E − 2
95707−08500	E − 15
95807−06012	F − 2
95807−06014	E − 12
95807−06020	F − 2
95807−06025	B − 10
95807−06030	B − 10
	F − 10
95807−08016	D − 14
95814−06040	C − 6
95814−08050	C − 6
95814−08060	C − 6
95814−08070	C − 6
95817−06020	C − 6
95817−06025	C − 6
95817−06030	C − 6
95817−06045	C − 7
95817−06050	F − 4
95817−06055	C − 6
95817−06070	C − 6
	C − 7
95817−08025	E − 15
95817−08030	D − 3
95817−08065	C − 6

PART NO.	GRID NO.
95817−08075	C − 6
95827−06010	F − 13
95827−06012	C − 14
95827−06014	B − 14
95827−06020	D − 2
95827−08035	D − 5
97007−05012	B − 10
97024−06016	F − 10
97706−04012	F − 5
97707−40012	E − 2
97707−40016	F − 6
97707−50012	D − 5
97707−50014	D − 5
97707−50016	F − 2
	F − 7
97707−50020	B − 15
	D − 4
97707−60020	D − 4
98502−04012	E − 9
98507−05010	C − 3
98507−05014	C − 3
98507−05020	F − 12
98507−05022	F − 9
98507−05030	C − 3
	F − 9
98507−05040	F − 9
98507−05045	F − 9
98507−06008	F − 10
98507−06035	B − 12
98507−06045	B − 12
	C − 3
98706−04012	E − 9
98707−03020	F − 9
98907−05012	B − 15
98907−05016	B − 15
99001−07600	C − 11
99001−10600	D − 2
99009−10400	C − 12
99009−11400	B − 12
99009−12400	B − 9
99009−19400	D − 2
99224−00140	D − 14
99226−00140	D − 14
99530−08012	B − 12
	C − 7
	C − 8
	C − 9
99530−08016	B − 13

NUMERICAL INDEX

PART NO.	GRID NO.	PART NO.	GRID NO.	PART NO.	GRID NO.	PART NO.	GRID NO.	PART NO.	GRID NO.	PART NO.	GRID NO.
99530−08016	C − 7										
99530−10114	C − 6										
	C − 8										
	C − 9										
99530−14016	B − 4										
	C − 6										